PARTS CATALOG

www.skutenyostrow.pl

200ST-7

目　　录

CONTENTS

FIG.1 气缸盖总成 CYLINDER COVER ASSY.....1

FIG.2 配气系统 INTAKE,EXHAUST SYSTEM.....3

FIG.3 曲柄连杆 CRANK CONNECTING ROD.....5

FIG.4 机油泵 OIL PUMP.....6

FIG.5 左右曲轴箱组合 LEFT,RIGHT CRANKCAST ASSY.....7

FIG.6 磁电机、左曲轴箱盖 MAGNE TOELE TRICITY MAHINE,LEFT CRANKCASE COVER.....9

FIG. 7 电起动系统 ELECTRIC STARTING SYSTEM.....10

FIG. 8 离合器 CLUTCH.....11

FIG. 9 反冲起动装置 KICK STARTER.....12

FIG. 10 主副轴组合 SHAFT ASSY.....13

FIG. 11 右曲轴箱盖组合 RICHT CRANKCASE COVER ASSY.....15

www.skuterwostrow.pl

FIG. 12 换档机构(外置式档显).....17
FIG. 13 化油器 CARBURETOR.....18
FIG. 14 THERMOSTAT 19
FIG. 15 FRAME.....20
FIG. 16 FRONT FENDER.....21
FIG. 17 REAR FENDER.....22
FIG. 18REAR ARM COMP.....23
FIG. 19 AR SUSPENSION.....24
FIG. 20 STEERING.....25
FIG. 21 UEL TANK.....26
FIG. 22 SEAT.....27
FIG. 23 FRONT WHEEL SYSTEM.....28
FIG. 24 REAR WHEEL.....29
www.skuteryostrow.pl

FIG. 25TEERING HANDLE.CABLE.....30
FIG. 26 STAND.FOOTREST.....31
FIG. 27 GUARD.....32
FIG. 28HANDLE SWITCH. LEVER.....33
FIG. 29ELECTRICAL.....34
FIG. 30ISK BRAKE SYSTEM.....35
FIG. 31 EXHAUST MUFFLER.....36
FIG. 32REAR LAMP.....37
FIG. 33WIRE HARNESS.....38
FIG. 34ACCESSORY.....39
FIG. 35ACCESSORY.....40

www.skuteryostrow.pl

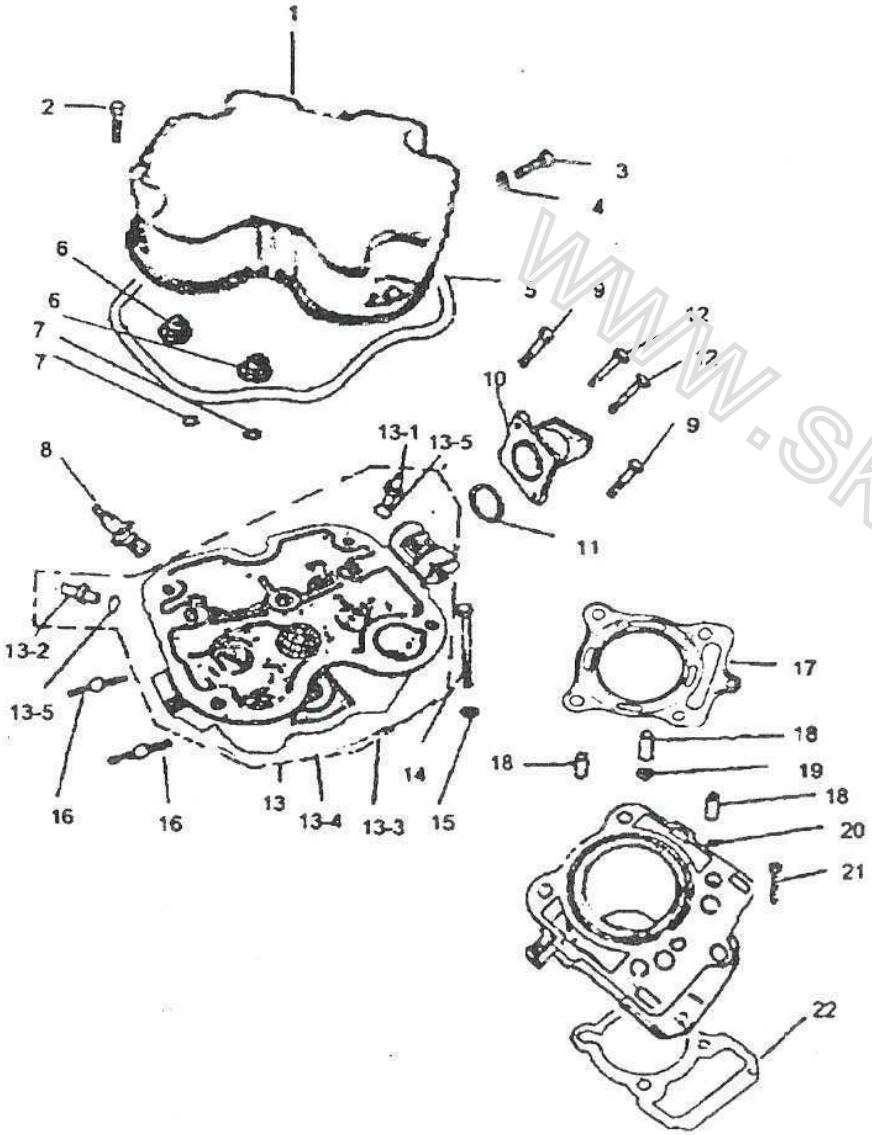

FIG.1 气缸盖总成 CYLINDER COVER ASSY

序号 S/N	零部件代号 Part No.	Description	零部件名称	数量 Quantity
1	GTDG	CYLINDER HEAD COVER	缸头顶盖	1
2	XNJTFLMLS 95023 – 06025	REXAGONAL FLANGE BOLT 950230-06025	小六角头法兰面螺栓95023 – 06025	3
3	XNJTFLMLS 95023 – 06012	REXAGONAL FLANGE BOLT 950230-06012	小六角头法兰面螺栓95023 – 06012	1
4	DQ	WASHER	垫圈	1
5	GTYFQ	CYLINDER HEAD OIL SEAL	缸头油封圈	1
6	GGLM	CYLINDER COVER NUT	缸盖螺母	4
7	DQ	WASHER	垫圈	2
8	HHS	SPARK PLUG D8RTC	火花塞	1
9	XNJTFLMLS 95023 – 06020	REXAGONAL FLANGE BOLT 950230-06020	小六角头法兰面螺栓95023 – 06020	2
10	JQGZH	INTAKE PIPE ASSY	进气管组合	1
11	OXQ	O-RING	O型圈	1
12	XNJTFLMLS 95023 – 06020	REXAGONAL FLANGE BOLT 950230-06020	小六角头法兰面螺栓95023 – 06020	2
13	QGGZH	CYLINDER COVER ASSY	气缸盖组合	1
13-1	JQMDG	INTAKE VALVE TUBE	进气门导管	1
13-2	PQMDG	EXHAUST VALUE TUBE	排气门导管	1
13-3	JQMZQ	VALVE SEAT INSERT,INTAKE	进气门座圈	1
13-4	PQMZQ	VALVE SEAT INSERT,EXHAUST	排气门座圈	1
13-5	OXMFQ	O-SEAL RING	O型密封圈	2
14	LS	BOLT	螺栓	1
15	DQ	WASHER	垫圈	1
16	PQKSTLS	STUD BOLT	排气孔双头螺栓	2
17	QGGDP	CYLINDER COVER PAD	气缸盖垫片	1
18	DWX	DOWEL PIN	定位销	3
19	OXQ	O-RING	O型圈	1

www.skuterpost.com.pl

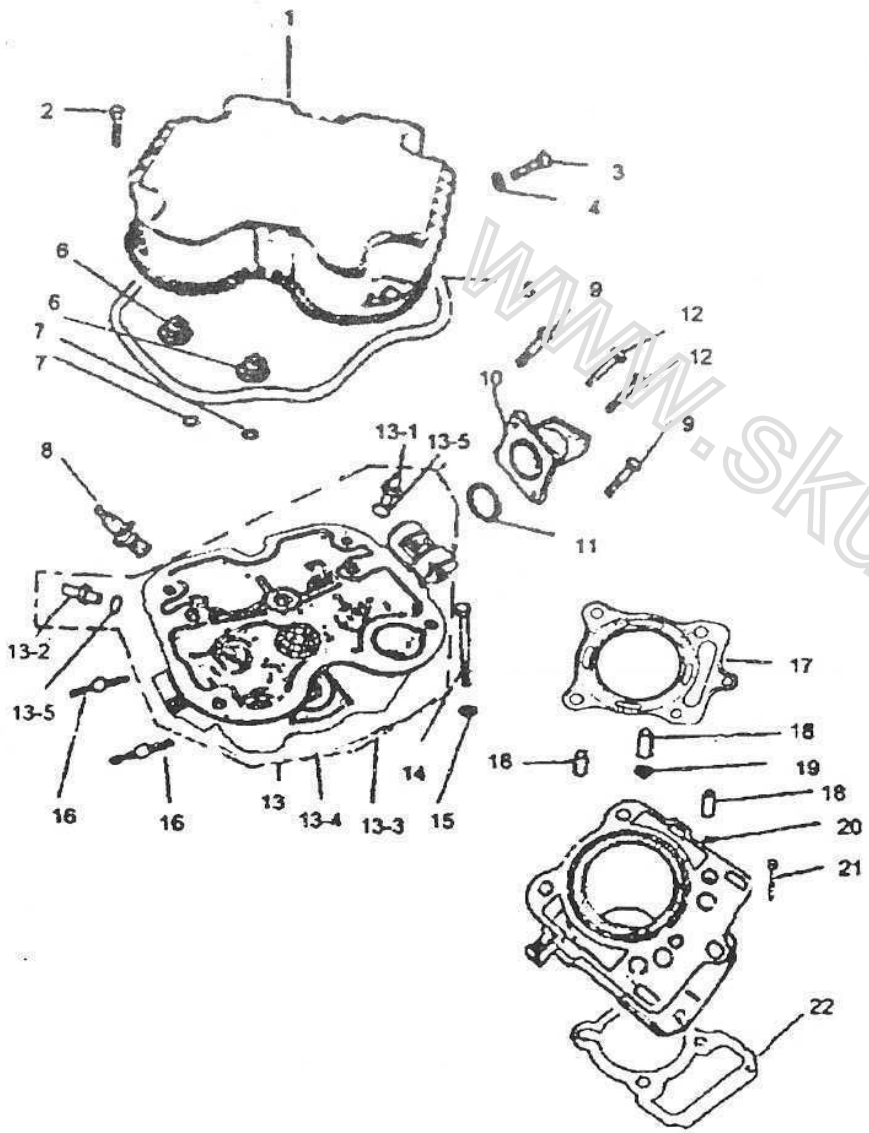

FIG.1 气缸盖总成 CYLINDER COVER ASSY

序号 S/N	零部件代号 Part No.	Description	零部件名称	数量 Quantity
20	GTZC	CYLINDER BOLDY ASSY	缸体总成	1
21	LS	BOLT	螺栓	1
22	GTMFD	CYLINDER BODY SEAL PAD	缸体密封垫	1

www.skuteryostrow.pl

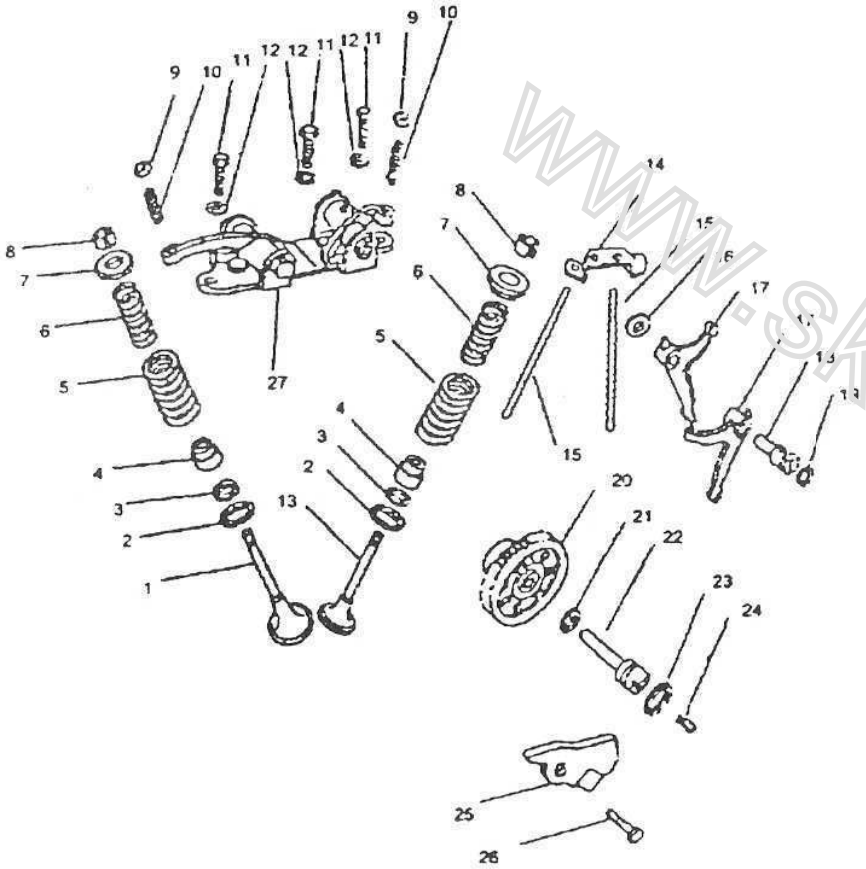

FIG.2 配气系统 INTAKE,EXHAUST SYSTEM

序号 S/N	零部件代号 Part No.	Description	零部件名称	数量 Quantity
1	JQM	INTAKE VALER	进气门	1
2	WHXZ	LOW SET OF OUTER SPRING	外簧下座	2
3	NHXZ	LOW SET OF INNER SPRING	内簧下座	2
4	QMGYF	VALVE ROD OIL SEAL	气门杆油封	2
5	QMWTH	VALVE OUTER SPRING	气门外弹簧	2
6	QMNTH	VALVE INNER SPRING	气门内弹簧	2
7	QMTHSZ	SPRING UPPER SET OF AIR VALVE	气门弹簧上座	2
8	QMSJ	VALVE CONE HALF	气门锁夹	4
9	TZLM	ADJUSTING NUT	调整螺母	2
10	TZLD	ADJUSTING SCREW	调整螺钉	2
11	LS	BOLT	螺栓	3
12	DQ	WASHER	垫圈	3
13	PQM	EXHAUST VALVE	排气门	1
14	TGDZ	ROD GUIDE SET	挺杆导座	1
15	TZZH	ROD ASSY	挺柱组合	2
16	BXDP	WAVE PAD	波形垫片	1
17	XYB	LOW SHAKING ARM	下摇臂	2
18	XYBZ	LOW SHAKING ARM SHAFT	下摇臂轴	1
19	MFQ	SEAL RING	密封圈	1
20	TLCIZH	CAM GEAR ASSY	凸轮齿轮组合	1
21	DQ	WASHER	垫圈	1
22	TLCIZ	CAM GEAR SHAFT	凸轮齿轮轴	1
23	OXQ	O-RING	O形圈	1
24	TH	SPRING	弹簧	1

www.skukeyoshi@yahoo.com

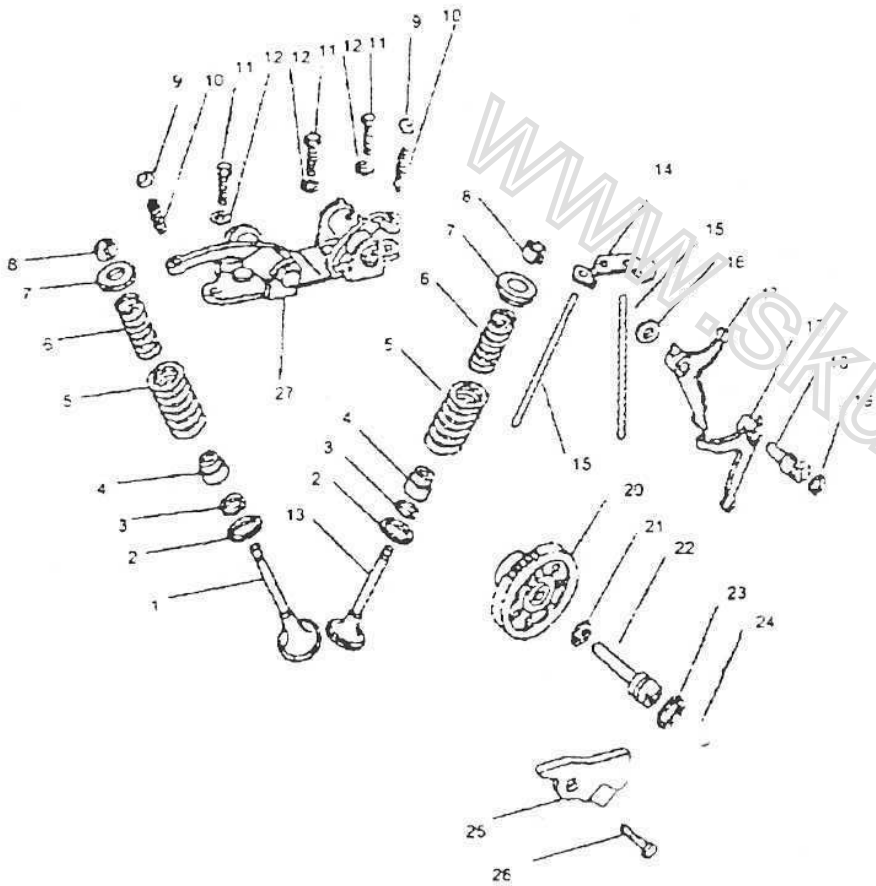

FIG.2 配气系统 INTAKE,EXHAUST SYSTEM

序号 S/N	零部件代号 Part No.	Description	零部件名称	数量 Quantity
25	YB-1	PRESSURE PLATE 1	压板1	1
26	XNJTFLMLS 95023－06010	REXAGONAL FLANGE BOLT 950230-06010	小六角头法兰面螺栓95023－06010	1
27	YBJZH	SHAKING ARM BRACKET ASSY	摇臂架组合	1

www.skuteryostrow.pl

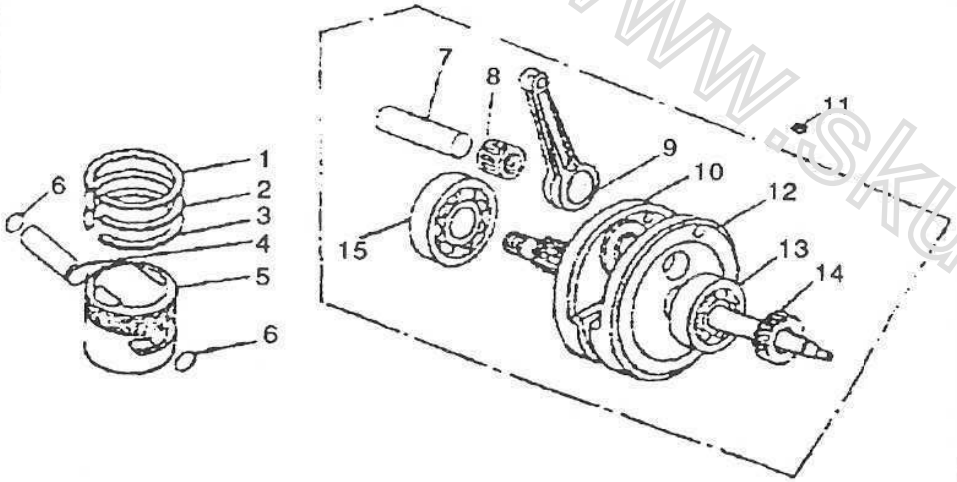

FIG.3 曲柄连杆 CRANK CONNECTING ROD

序号 S/N	零部件代号 Part No.	Description	零部件名称	数量 Quantity
1	HSH-1	PISTON RING 1	活塞环1	1
2	HSH-2	PISTON RING 2	活塞环2	1
3	YHZJ	OIL RING UNIT	油环组件	1
4	HSX	PISTON PIN	活塞销	1
5	HS	PISTON	活塞	1
6	HSXDQ	PISTON PIN CIRCLIP	活塞销挡圈	2
7	QBXZJ	CRANK PIN UNIT	曲柄销组件	1
8	GZZC	NEEDLE BEARING	滚针轴承	1
9	LG	CONNECTING-ROD	连杆	1
10	YQB	RIGHT CRANK	右曲柄	1
11	BYJ	WOODRUFF KEY	半圆键	1
12	ZQB	LEFT CRANK	左曲柄	1
13	SCQZC	BALL BEARING	带密封圈的深沟球轴承	1
14	ZSCL	TIMING GEAR	正时齿轮	1
15	GDZC	ROLLING BEARING	滚动轴承	1

www.skutery-ostrow.pl

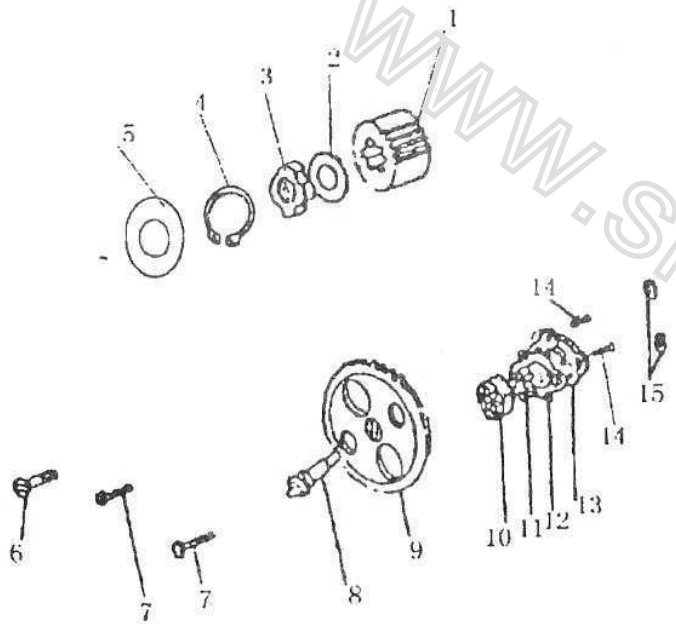

FIG.4 机油泵 OIL PUMP

序号 S/N	零部件代号 Part No.	Description	零部件名称	数量 Quantity
1	QDCL	DRIVE GEAR	驱动齿轮	1
2	SJDQ	LOCK WASHER	锁紧垫圈	1
3	SJLM	LOCK NUT	锁紧螺母	1
4	DQ	CIRCLIP	挡圈	1
5	YF	OIL SEAL	油封	1
6	LD-M6×30	SCREW M6×30	螺钉M6×30	1
7	LD -M5×20	SCREW M5×20	螺钉M5×20	2
8	YBZ	PUMP AXLE	油泵轴	1
9	CDCL	TRANSMISSION GEAR	传动齿轮	1
10	YBWZZ	OUTER ROTATOR TO PUMP	油泵外转子	1
11	YBNZZ	INNER ROTATOR TO PUMP	油泵内转子	1
12	YBG	PUMP COVER	油泵盖	1
13	YBGB	PUMP COVER PLATE	油泵盖板	1
14	LD-M4×12	SCREW M4×12	螺钉M4×12	2
15	OXQ	O-RING	O型圈	2

www.skutermostrow.pl

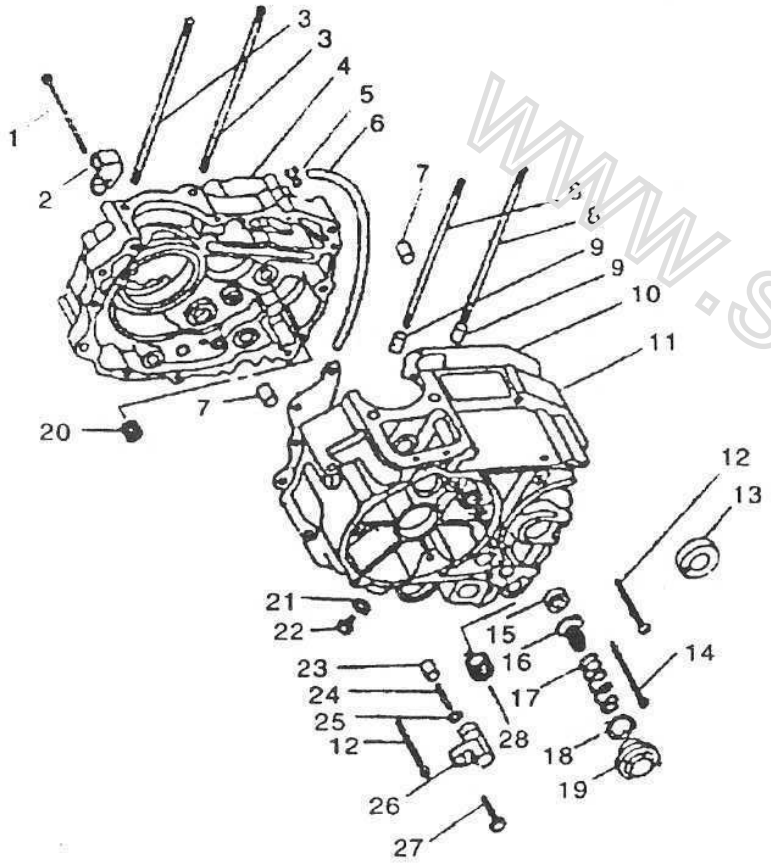

FIG.5 左右曲轴箱组合 LEFT,RIGHT CRANKCAST ASSY

序号 S/N	零部件代号 Part No.	Description	零部件名称	数量 Quantity
1	LS–M6×55	BOLT M6×55	螺栓M6×55	1
2	LHQLSGDZ	CLUTCH CABLE FIRM SET	离合器拉索固定座	1
3	YXSTLS	RIGHT CRANKCASE STUD BOLT	右箱双头螺栓	2
4	YQZXZC	RIGHT CRANKCASE ASSY	右曲轴箱总成	1
5	KG	CLIP	卡箍	1
6	TQG	AIRFLOW PIPE	通气管	1
7	DWX	DOWEL PIN	定位销	2
8	YXSTLS	LEFT CRANKCASE GASKET	左箱双头螺栓	2
9	DWX	DOWEL PIN	定位销	2
10	ZYXMFD	LEFT,RIGHT CRANKCASE ASSY	左、右箱密封垫	1
11	ZQZXZC	LEFT CRANKCASE ASSY	左曲轴箱总成	1
12	LD–M6×50	SCREW M6×50	螺钉M6×50	9
13	ZQZYF	LEFT CRANK OIL SEAL	左曲轴油封	1
14	LS–M6×95	BOLT M6×95	螺栓M6×95	1
15	HDZYF	SHIFT SHAFT OIL SEAL	换档轴油封	1
16	JYLWZH	OIL FILTER ASSY	机油滤网组合	1
17	LWTH	FILTER SPRING	滤网弹簧	1
18	OXQ	O-RING	O形圈	1
19	LWG	FILTER COVER	滤网盖	1
20	GZZC–HK1512	NEEDLE BEARING HK1512	滚针轴承HK1512	1
21	DQ	WASHER	垫圈	1
22	FYLS	OIL DRAIN PLUG SCREW	放油螺塞	1
23	ZCTS	BEARING PUSH BOLT	轴承推栓	1
24	YSTH	COMPRESSION SPRING	压缩弹簧	1

www.skutervyosyow.pl

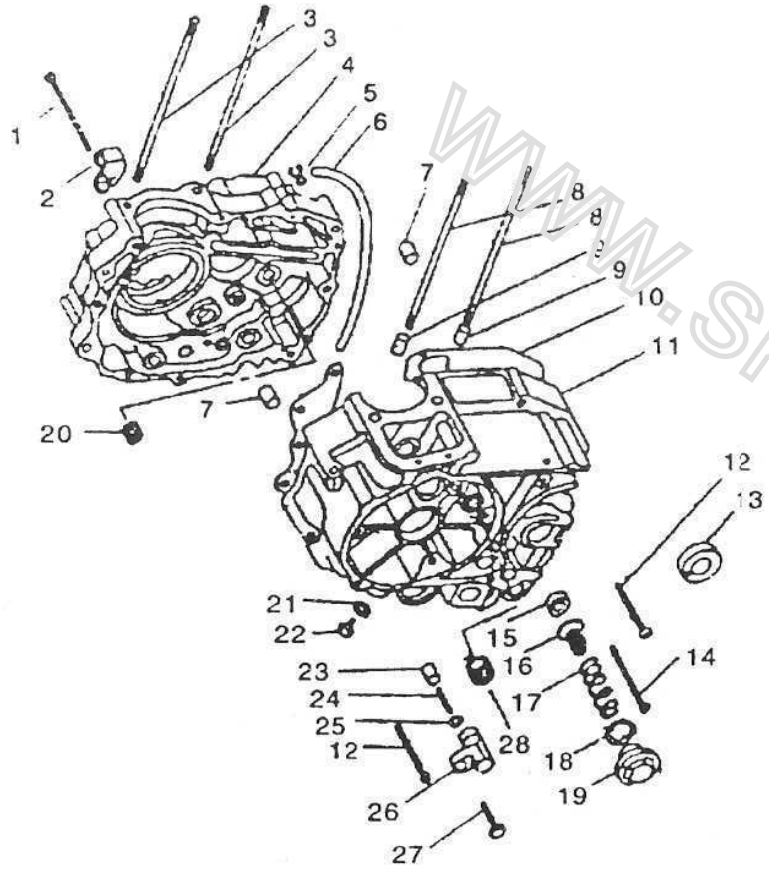

FIG.5 左右曲轴箱组合 LEFT,RIGHT CRANKCAST ASSY

序号 S/N	零部件代号 Part No.	Description	零部件名称	数量 Quantity
25	OXQ	O-RING	O形圈	1
26	TSZJ	PUSH BOLT STAND	推栓支架	1
27	LS–M6×25	BOLT M6×25	螺栓M6×25	1
28	GZZC–HK1010	NEEDLE BEARING HK1010	滚针轴承HK1010	2

www.skuteryostrow.pl

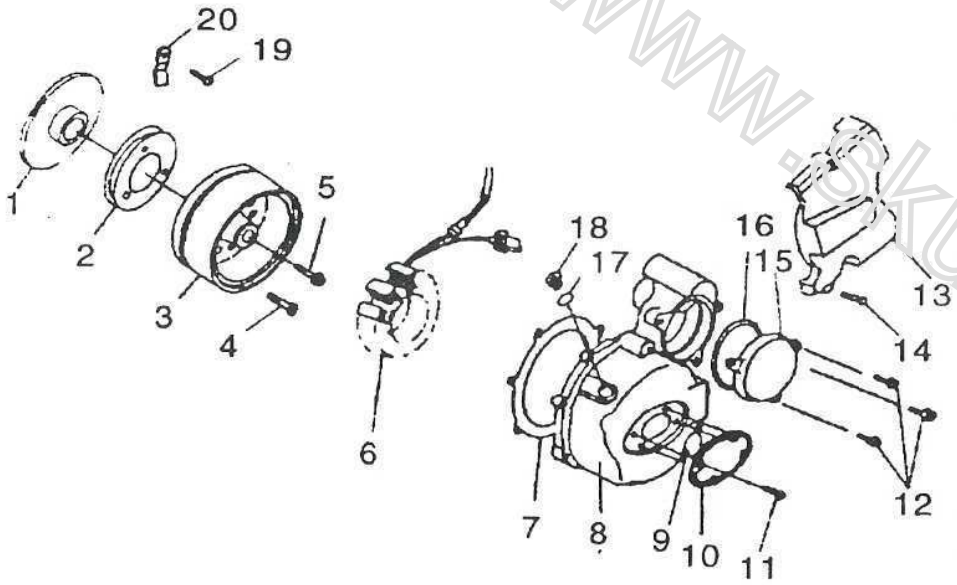

FIG.6 磁电机、左曲轴箱盖 MAGNE TOELE TRICITY MAHINE,LEFT CRANKCASE COVER

序号 S/N	零部件代号 Part No.	Description	零部件名称	数量 Quantity
1	CYLHQCL	CLUTCH GEAR	超越离合器齿轮	1
2	CYLHQZH	CLUTCH ASSY	超越离合器组合	1
3	ZZZH	ROTOR ASSY	转子组合	1
4	LS-M8×18	BOLT M8×18	螺栓M8×18	3
5	LS	BOLT	螺栓	1
6	DZZH	STATOR ASSY	定子组合	1
7	ZXGMFD	LEFT CRANKCASE COVER GASKET	左箱盖密封垫	1
8	ZXG	LEFT CRANKCASE COVER	左箱盖	1
9	OXMFQ	O-RING	O型密封圈	1
10	ZSBG	LEFT BRAND COVER	左商标盖	1
11	LS-M6×12	BOLT M6×12	螺栓M6×12	4
12	LS-M6×20	BOLT M6×20	螺栓M6×20	3
13	LLG	CHAIN GEAR COVER	链轮盖	1
14	LS-M6×30	BOLT M6×30	螺栓M6×30	2
15	DQDDLSG	ELECTRIC DRIVN DRIVER GEAR CASE COVER	电起动情轮室盖	1
16	OXMFQ	O-RING	O型密封圈	1
17	OXMFQ	O-RING	O型密封圈	1
18	GCKG	HAND HOLE COVER	观察孔盖	1
19	LS-M6×10	BOLT M6×10	螺栓M6×10	1
20	YB-2	PRESSURE PLATE 2	压板2	1

www.skutenyosi.low.pl

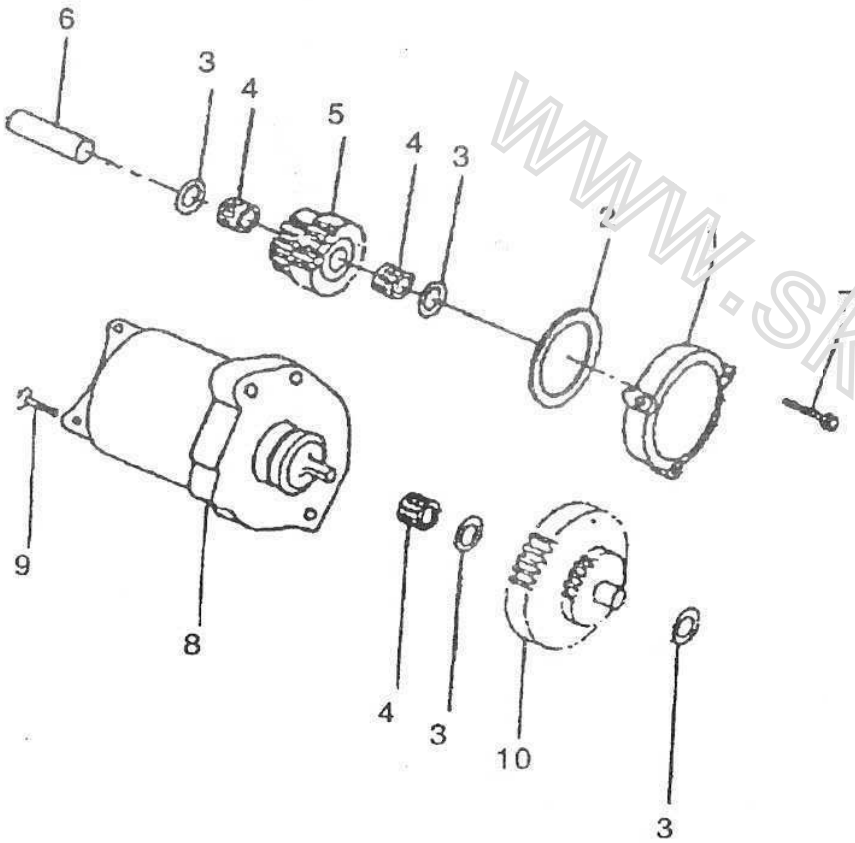

FIG.7 电起动系统 ELECTRIC STARTING SYSTEM

序号 S/N	零部件代号 Part No.	Description	零部件名称	数量 Quantity
1	JSCLG	OVERSTEP GASKET COVER	减速齿轮盖	1
2	OXQ	O-RING	O型圈	1
3	DP	RAD	垫片	4
4	GZZC-HK1010	NEEDLE BEARING HK1010	滚针轴承HK1010	3
5	JSCLZH-1	RETARDING GEAR ASSY	减速齿轮组合1	1
6	GLZZH	STATER GEAR ASSY	过轮轴组合	1
7	LS-M6×20	BOLT M6×20	螺栓M6×20	3
8	QDDJ	STARTING MOTORING	起动电机	1
9	LS-M6×25	BOLT M6×25	螺栓M6×25	h
10	QDJSCL	STARTING RETARDING GEAR	起动减速齿轮	1

www.skuterostrow.pl

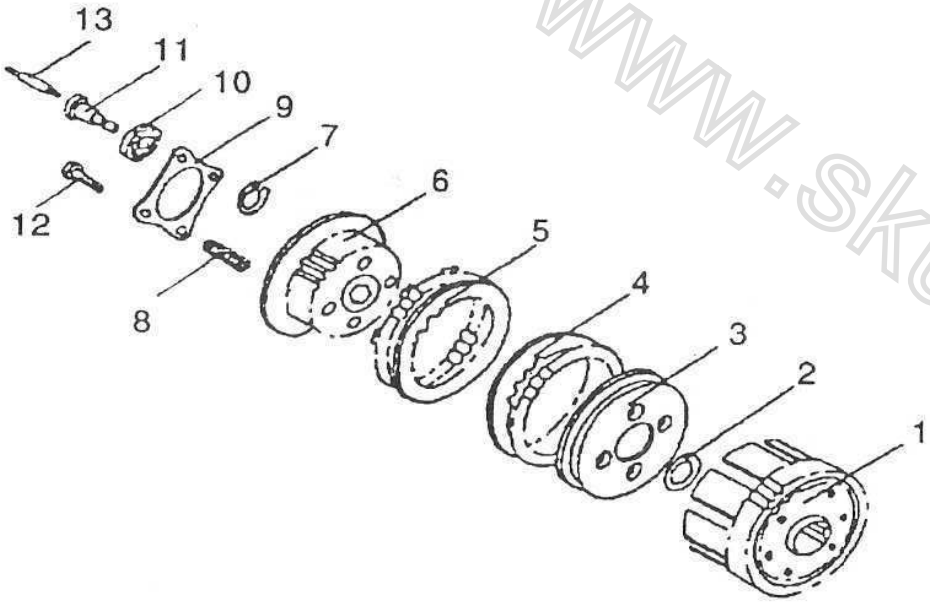

FIG.8 离合器 CLUTCH

序号 S/N	零部件代号 Part No.	Description	零部件名称	数量 Quantity
1	CDCLZH	DRIVEN GEAR ASSY	从动齿轮组合	1
2	HJDP	SPLINE PAD	花键垫片	1
3	LHQDZ	PRESSURE SET	离合器底座	1
4	MCPZH	FRICTION LINER UNIT	磨檫片组件	5
5	LHQ	CLUTCH PLATE	离合器片	4
6	LHQGZ	CLUTCH HUBASSY	离合器毂组	1
7	DQ	CIRCLIP	挡圈	1
8	LHQTH	CLUTCH SPRING	离合器弹簧	4
9	LHQYB	PRESS PLATE，CLUTCH	离合器压板	1
10	ZC-6001	BEARING 6001	轴承6001	1
11	DGT	EJECTOR PIN SLEEVE	顶杆套	1
12	LS	BOLT	螺栓	4
13	DG	EJECTOR	顶杆	1

www.skutery-ostrow.pl

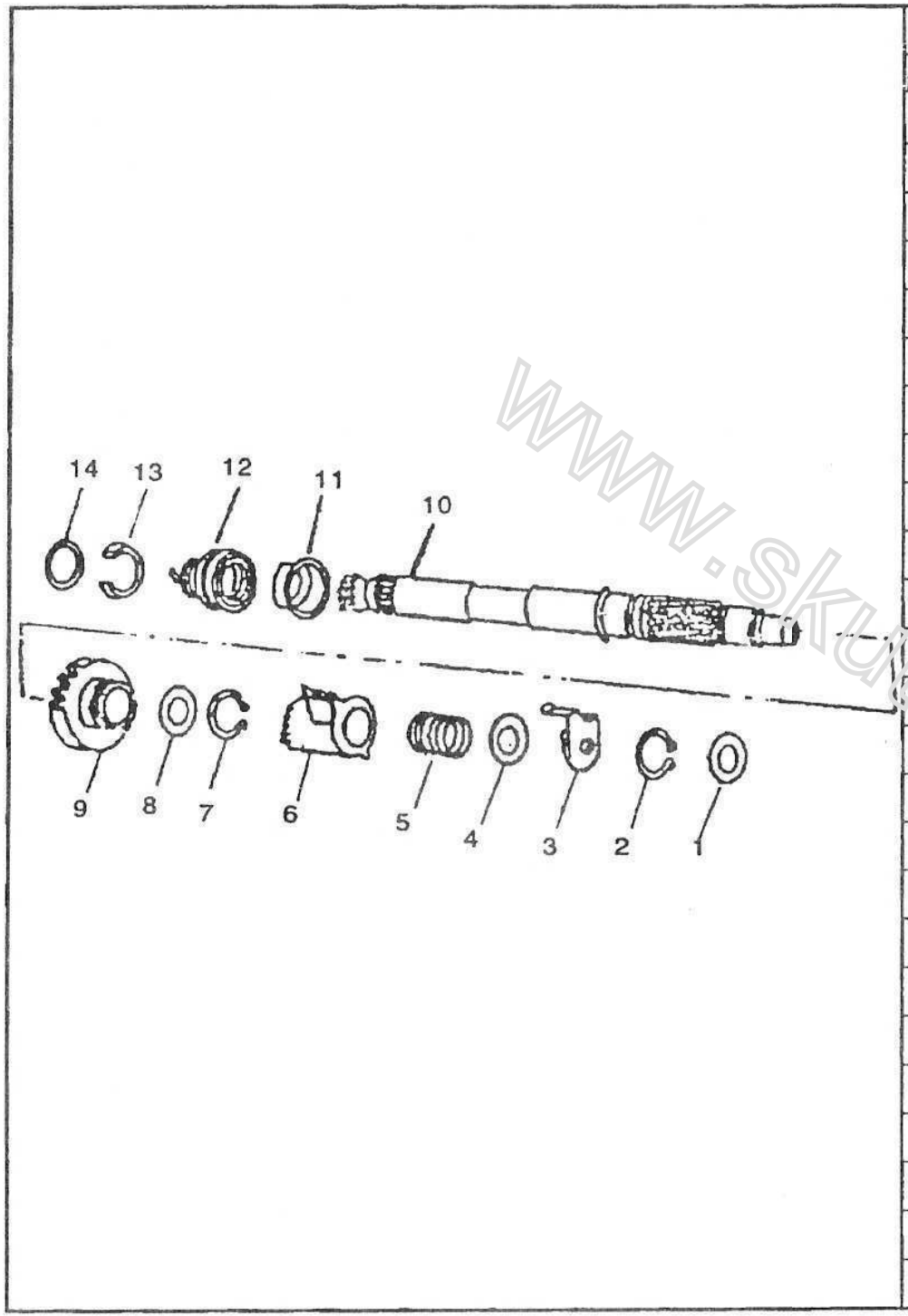

FIG.9 反冲起动装置 KICK STARTER

序号 S/N	零部件代号 Part No.	Description	零部件名称	数量 Quantity
1	DQ	WASHER	垫圈	1
2	DQ-16	CIRCLIP16	挡圈16	1
3	JLDPZH	RATCHER GUIDE PLATE ASSY	棘轮导片组合	1
4	DQ	WASHER	垫圈	1
5	TH	SPRING	弹簧	1
6	QDJL	TART RATCHET	起动棘轮	1
7	DQ	CIRCLIP16	挡圈	1
8	DDQ	WASHT	垫圈	1
9	QDCL	STARTING GEAR	起动齿轮	1
10	QDZ	STARTING AXLE	起动轴	1
11	THZ	SPRING PLATE	弹簧轴	1
12	SLTH	BISEROAL SPRING	双列弹簧	1
13	CT	BUSHING	衬套	1
14	DQ	WASHER	垫圈	1

www.skutervostrow.pl

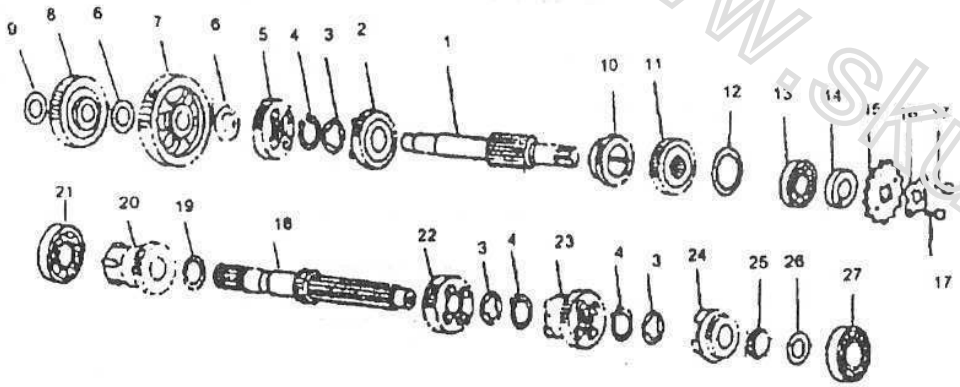

FIG.10 主副轴组合 SHAFT ASSY

序号 S/N	零部件代号 Part No.	Description	零部件名称	数量 Quantity
1	QDZ	DRIVE SHAFT	驱动轴	1
2	SDCDCL	GER，4TH WHEEL	四档从动齿轮	1
3	HJDQ	SPLINE WASHER	花键垫圈	3
4	DQ	CIRCLIP	挡圈	3
5	SDCDCL	GEAR，3RD WHEEL	三档从动齿轮	1
6	TLDQ-4	THRUST WASHER	推力垫圈4	2
7	YDCDCLZH	GEAR，LST WHEEL	一档从动齿轮组合	1
8	CDGQCLZH	STARTING GEAR ASSY	超动过桥齿轮组合	1
9	TLDQ-3	THRUST WASHER 3	推力垫圈3	1
10	WDCDCL	GEAR，5TH WHEEL	五档从动齿轮	1
11	EDCDCL	GEAR，2ND WHEEL	二档从动齿轮	1
12	DQ	WASHER	垫圈	1
13	GDZC-6204	ROLLING BEARING 6204	滚动轴承6204	1
14	QDZYF	DRIVE SHAFT OIL SEAL	驱动轴油封	1
15	QDLL	DRIVE SPROCKET	驱动链轮	1
16	GDB	FIRM PLATE	固定板	1
17	LS M6×20	BOLT M6×20	螺栓M6×10	2
18	ZZ	MAIN SHAFT	主轴	1
19	TLDQ-1	THRUST WASHER 1	推力垫圈1	1
20	QDCLZH	STARTING WHEEL ASSY	起动齿轮组合	1
21	GDZC-6006	BOLLING BEARING 6006	滚动轴承6006	1
22	SDCDCL	GEAR，3RD PINION	三档从动齿轮	1
23	SDCDCL	GEAR，4TH PINION	四档从动齿轮	1
24	WDCLCL	GEAR，5HT PINION	五档从动齿轮	1

www.skuterpostow.pl

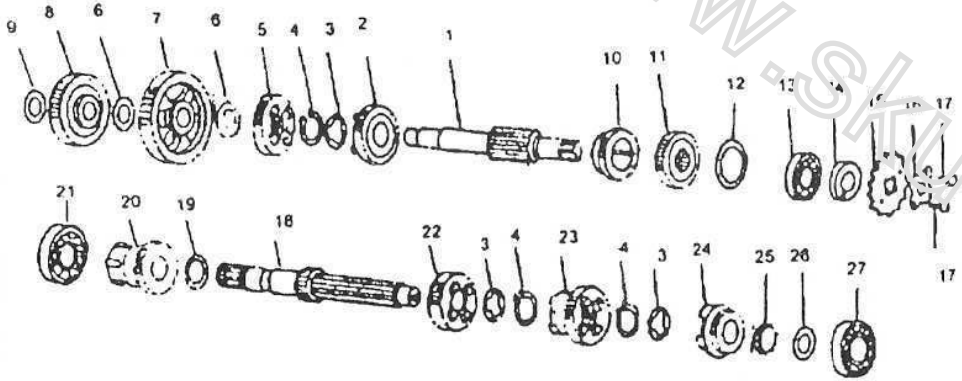

FIG.10 主副轴组合 SHAFT ASSY

序号 S/N	零部件代号 Part No.	Description	零部件名称	数量 Quantity
25	EDCDCL	GEAR，2ND PINION	二档从动齿轮	1
26	TLDQ-2	THRUST WASHER 2	推力垫圈2	1
27	GDZC-6202Z	ROLLING BEARING 6202Z	滚动轴承6202Z	1

www.skuteryostrow.pl

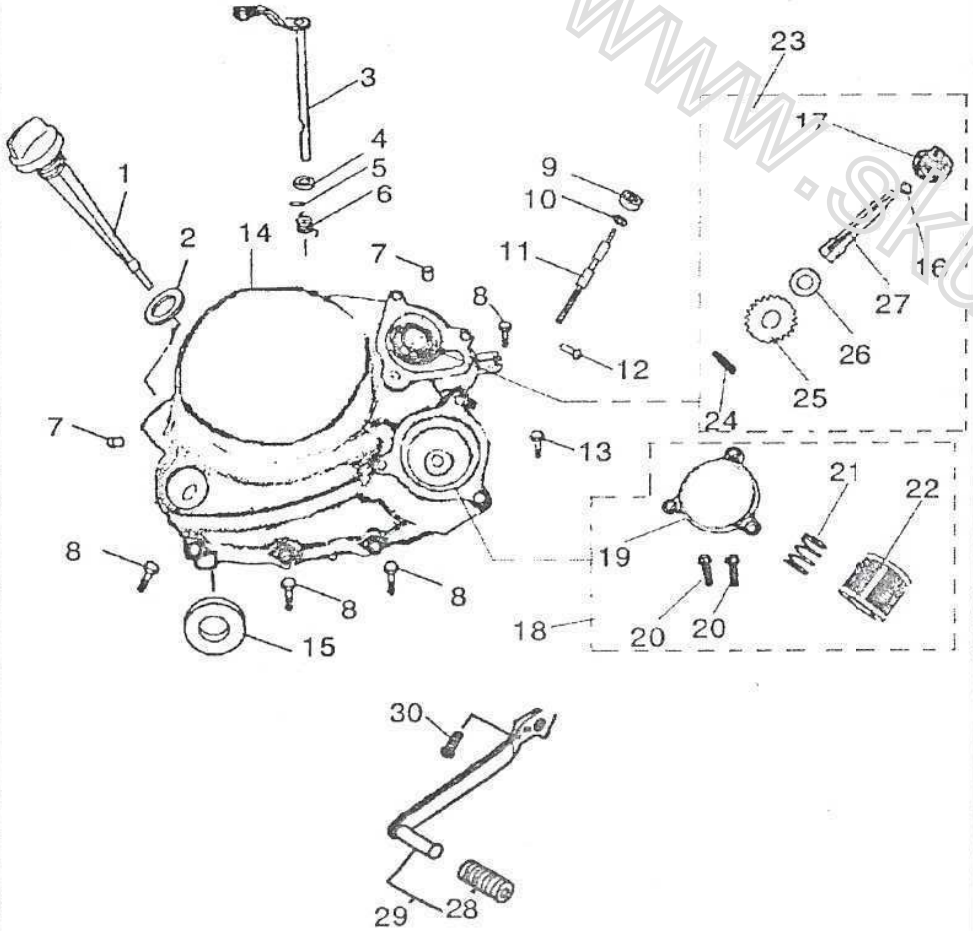

FIG.11 右曲轴箱盖组合 RIGHT CRANKCASE COVER ASSY

序号 S/N	零部件代号 Part No.	Description	零部件名称	数量 Quantity
1	YBC	OIL GAUGE	油标尺	1
2	OXQ-18×3.55	O-RING 18×3.55	O形圈18×3.55	1
3	YBZJ	SHABING ARM UNIT	摇臂组件	1
4	OXQ	O-RING	O形圈	1
5	KKX-2×15	PIN 2×15	开口销2×15	1
6	NH	TORSION SPRING	扭簧	1
7	DWX	DOWEL PIN	定位销	1
8	LS-M6×40	BOLT M6×40	螺栓M6×40	10
9	ZSBCLYF	OIL SEAL TO SPEEDORNETER WHEEL	转速表齿轮油封	1
10	DP	PAD	垫片	1
11	ZSBCL	SPEEDORNETER WHEEL	转速表齿轮	1
12	CTLZ-M5×25	SCREW M5×25	沉头螺钉M5×25	1
13	LS-M6×50	BOLT M6×50	螺栓M6×50	1
14	YQZXGZH	RIGHT ORANKCOSE COVER ASSY	右曲轴箱盖组合	1
15	FCZYF	KICK STARTER OIL SEAL	反冲轴油封	1
16	OXQ	O-RING	O形圈	1
17	SBYL	THE IMPELLER OF WATER PUMP	水泵叶轮	1
18	YLZJ	FILTER ASSY	油滤组件	1
19	LWG	FILTER COVER	滤网盖	1
20	LD	BOLT	螺钉	2
21	TH	SPRING	弹簧	1
22	LW	FILTER	滤网	1
23	SBZJ	WATER PUMP ASSY	水泵组件	1
24	X	PIN	销	1

www.skuterpostrow.pl

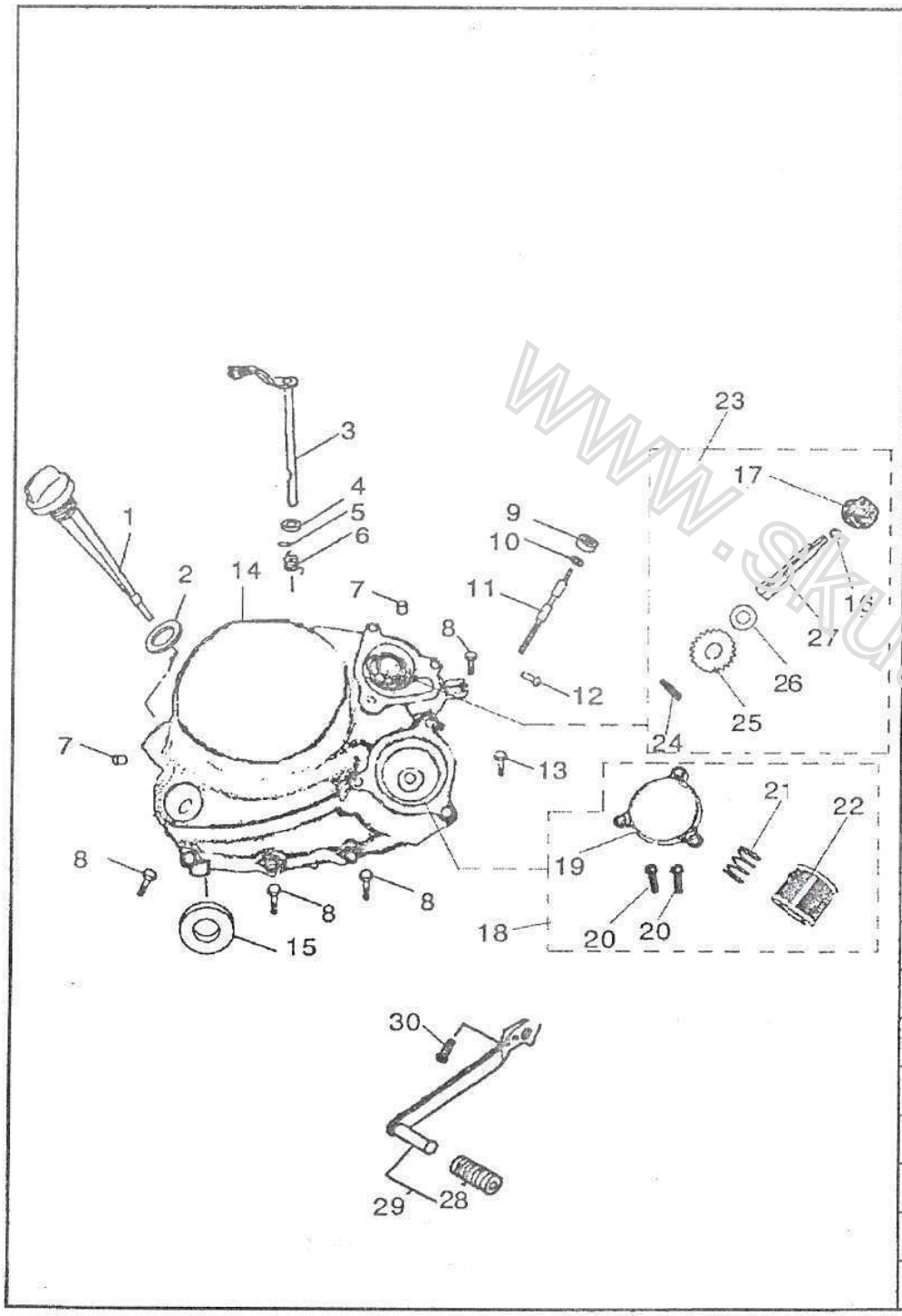

FIG.11 右曲轴箱盖组合 RIGHT CRANKCASE COVER ASSY

序号 S/N	零部件代号 Part No.	Description	零部件名称	数量 Quantity
25	SBCL	THE GEAR OF WATER PUMP	水泵齿轮	1
26	DQ	WASHER	垫圈	1
27	SBZ	THE SHAFT OF WATER PUMP	水泵轴	1
28	34116-LIN-90	PEDAL, CHANGE	换档臂	1
29	34117-SPR-00	RUBBER, CHANGE PEDAL	橡胶套	1
30	34118-SPR-00	BOLT, M6 × 20	螺钉 M6 × 20	1

www.skuteryostrow.pl

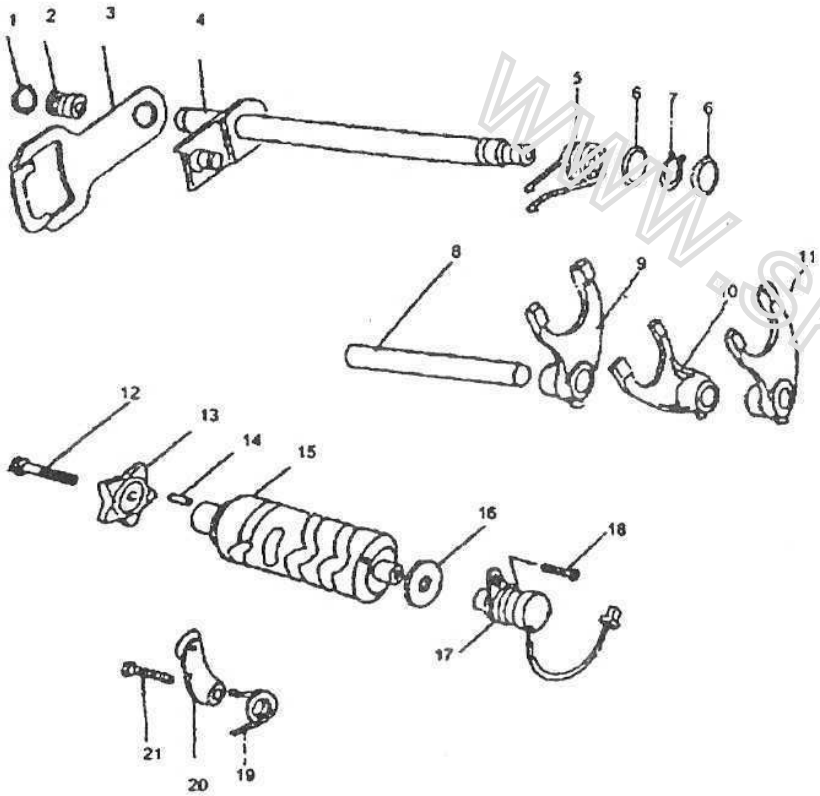

FIG.12 换档机构（外置式档显） CEAR SHIFT DEVICE

序号 S/N	零部件代号 Part No.	Description	零部件名称	数量 Quantity
1	Q-12	CIRCKIP 12	挡圈12	1
2	YH	SPING	压簧	1
3	KZB	CONTROL PLATE	控制板	1
4	BSZZH	SHIFTING AXLE ASSY	变速轴组合	1
5	NH	TORSION SPRING	扭簧	1
6	PDQ	FLAT WASHER	平垫圈	2
7	DQ-14	CIRCKIP 14	挡圈14	1
8	BCZ	FORK SHAFT	拨叉轴	1
9	BC-3	FORK 3	拨叉3	1
10	BC-2	FORK 2	拨叉2	1
11	BC-1	FORK 1	拨叉1	1
12	LS-M6×25	BOLT M6×25	螺栓M6×25	1
13	XXL	SPIDER WHEEL	星形轮	1
14	X	PIN	销	1
15	HDTL	SHIFTING CAM	换档凸轮	1
16	DWXSYF	OIL SAEL	档位显示油封	1
17	DWXHFSQ	SHIFT SIGNAL SENDER	档位信号发送器	1
18	LS-M6×10	BOLT M6×10	螺栓M6×10	1
19	NH	TORSION SPRING	扭簧	1
20	XWGGZC	SHIFT PEDAL	限位杠杆总成	1
21	LS-M6×20	BOLT M6×20	螺栓M6×20	1

www.skuterwyosztow.pl

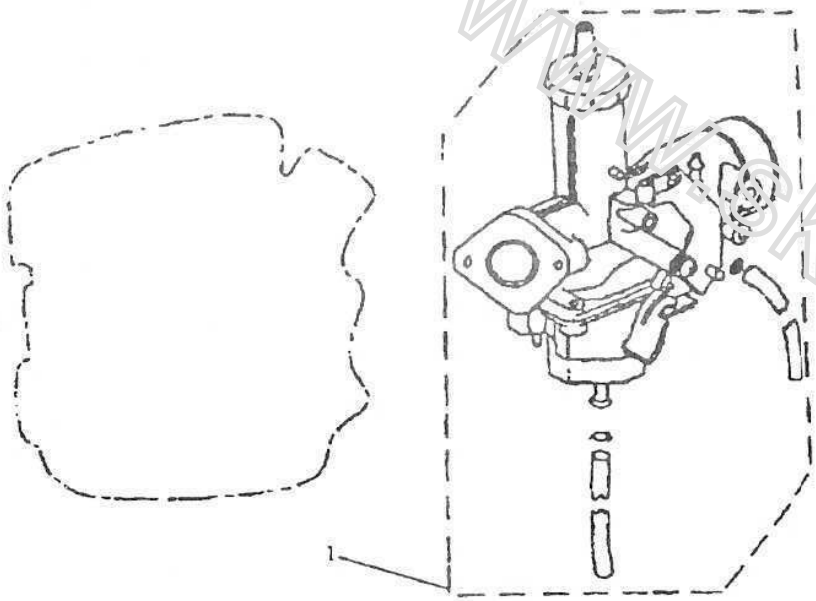

FIG.13 化油器 CARBURETOR

序号 S/N	零部件代号 Part No.	Description	零部件名称	数量 Quantity
1	HYQG-F9	CARBURETOR	化油器盖	1
2	HYQYZ-F9	OIL NEEDLE, CARBURETER	化油器油针	1
3	HYQZC-F9	CARBURETER ASSY	化油器总成	1
4	HYQH-F9	CARBURETER SPRING	化油器簧	1
5	JQG-F9	INLET TUBE	进气管	1
6	BJ818LDM6×30-F9	BOLT M6×30	螺栓M6×30	2

www.skuterypostrow.pl

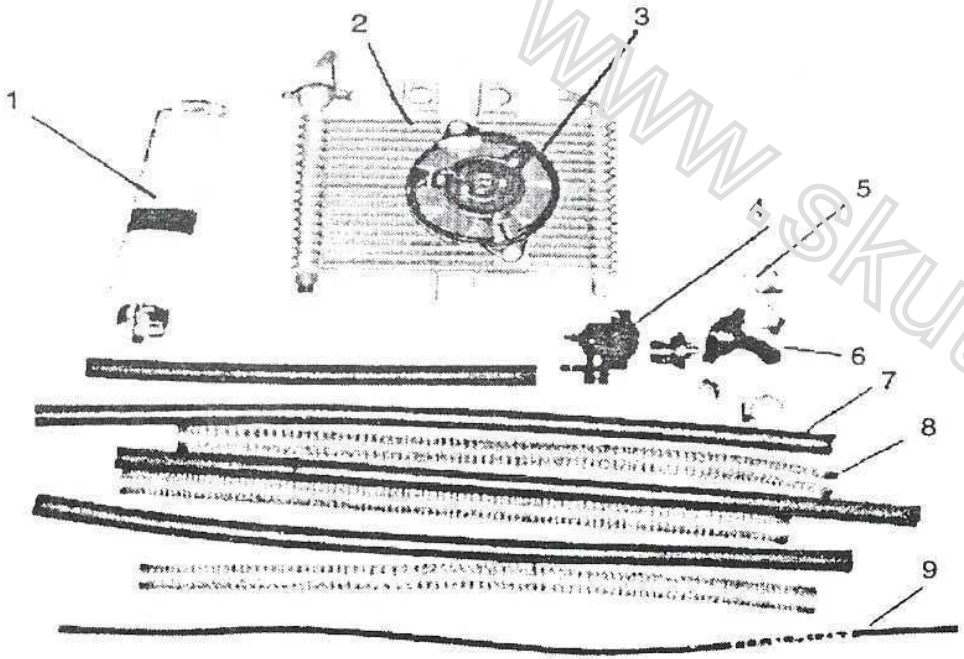

FIG.14 THERMOSTAT

序号 S/N	零部件代号 Part No.	Description	零部件名称
1	FSX-F2	VICE WATER TANK	副水箱
2	SX-F2	WATER TANK	水箱
3	FS-F2	COOLING FAN	风扇
4	JWQSK-F2	LOWER COVER, THERMOSTAT	节温器下壳
5	KG-F2	CLIP	卡箍
6	JEQSK-F2	UPPER COVER, THERMOSTAT	节温器上壳
7	SG-F2	WATER TUBE	水管
8	SGFZ-F2	SHELL, WATER TUBE	水管护罩
9	SG-F2	WATER TUBE	水管

www.skuteryostrow.pl

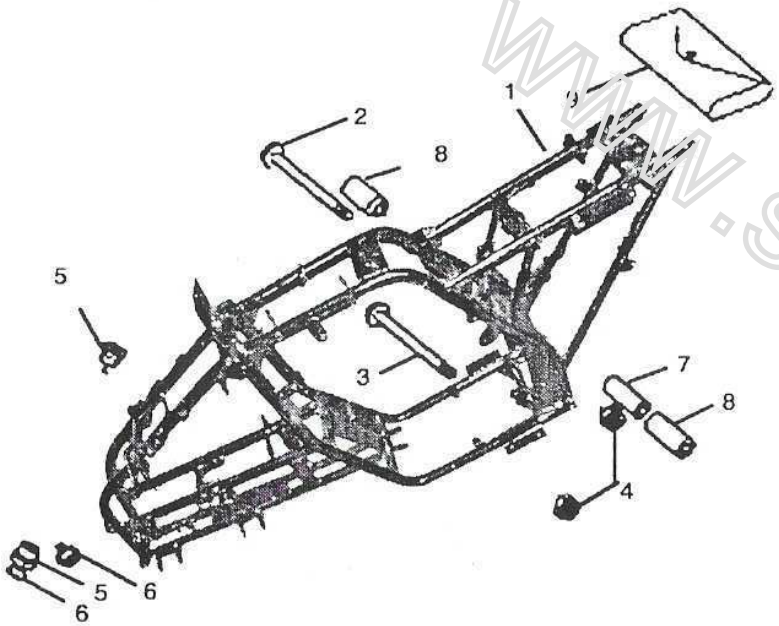

FIG. 15 FRAME

REF. NO.	PART NO.	DESCRIPTION	名称	Q'TY
1	41100-229-0000	PRAME COMP	车架	1
2	41167-229-0000	BOLT, FLANGE	螺栓	2
3	41168-229-0000	BOLT, FLANGE	螺栓	1
4	GB/T 810-1988	NUT, SELF-LOCKING	螺母	1
5	GB/T 810-1988	BUSH, SOLID	衬套	2
6	GB/T 818-2000	NIPPLE, GREASE	加油嘴	1
7	41169-229-0000	BUSH 1	衬管	1
8	41171-229-0000	PIPE	减震衬套	2
9	71130-229-0000	TOOL KIT	工具包	1

www.skuteryostrow.pl

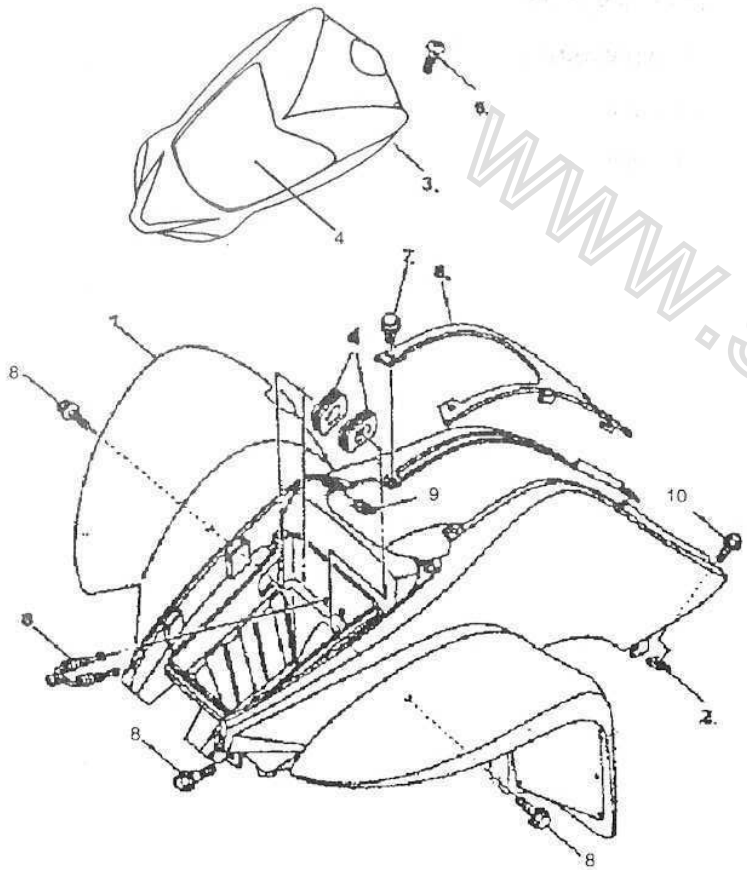

FIG. 16 FRONT FENDER

REF. NO.	PART NO.	DESCRIPTION	名称	Q'TY
1	53110-229-0000	FRONT FENDER COMP	前档泥板	1
2	17118-229-0000	NUT, SPRING	卡子	4
3	43241-229-0000	FENDER, FRONT 2	前面罩	1
4	GB/T16675-1996	HEAD LIGHT	大灯	1
5	GB/T 16674-1996	BOLT, HEXAGON SOCKET HEAD	螺栓	2
6	16711-229-0000	COVER, TOP	油箱护板	1
7	16800-229-0000	RIVET	橡胶安装钉组件	2
8	GB/T 16674-1996	BOLT	螺栓	2
9	17132-229-0000	NUT	螺母	8
10	GB/T 16674-1996	BOLT, WITH WASHER	螺栓	8

www.skuteryostrow.pl

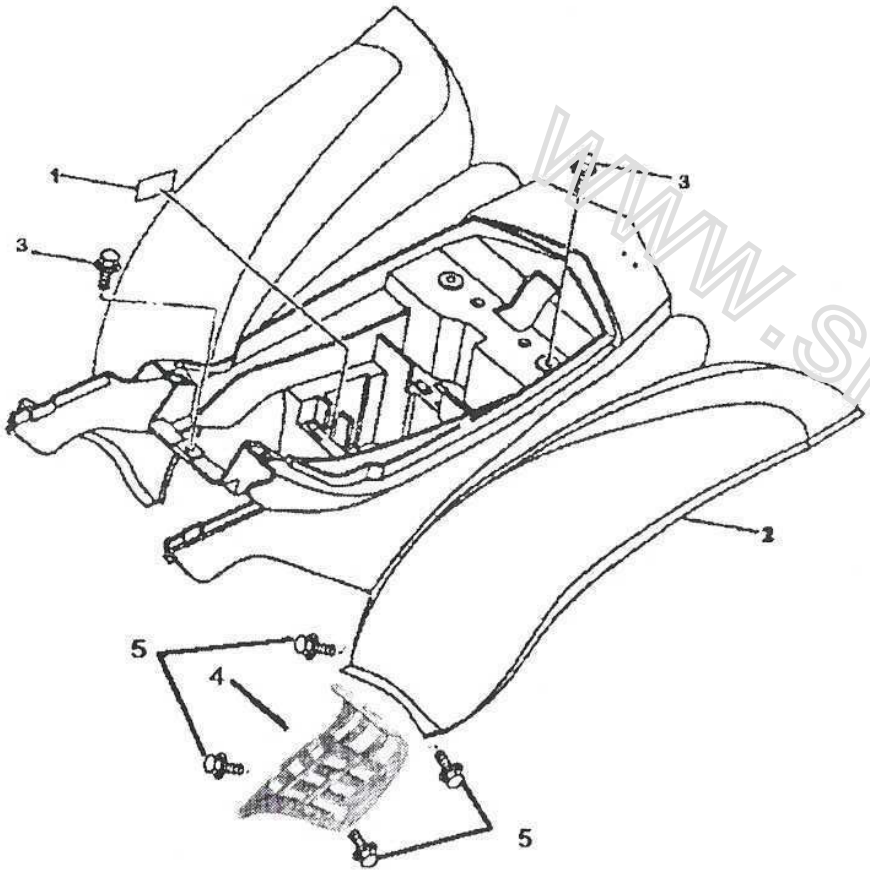

FIG. 17 REAR FENDER

REF. NO.	PART NO.	DESCRIPTION	名称	Q'TY
1	63123-229-0000	DAMPER	减震泡沫	5
2	63100-229-0000	REAR FENDER COMP	后档泥板	1
3	GB/T 16674-1996	BOLT, WITH WASHER	螺栓	3
4	41831-229-0000	STAY,FENDER	左右脚蹬	2
5	GB/T16674-1996	BOLT,FLANGE	螺栓	4

www.skuteryostrow.pl

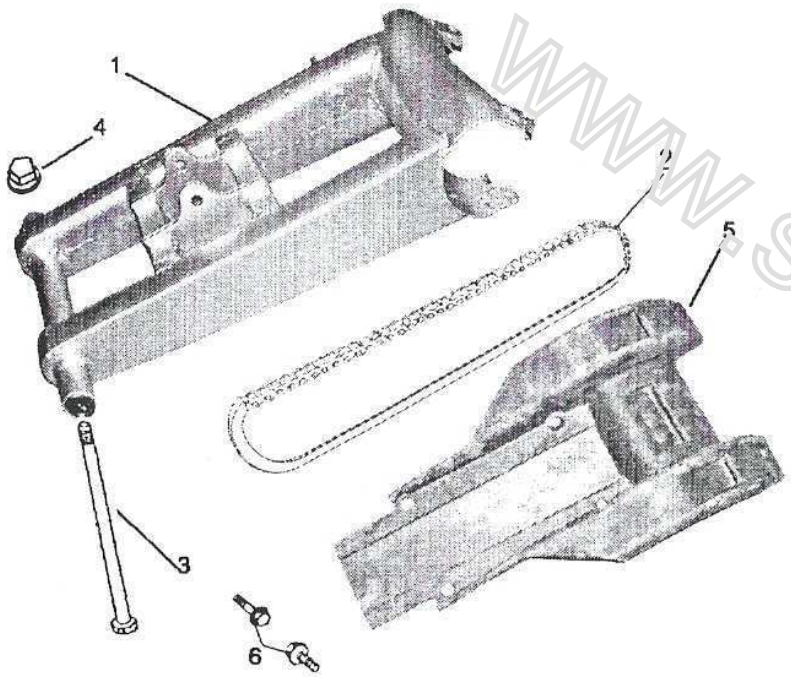

FIG. 18 REAR ARM COMP

REF. NO.	PART NO.	DESCRIPTION	名称	Q'TY
1	61000-229-0000	REAR ARM COMP	平叉	1
2	29730-229-0000	CHAIN	链条	1
3	61210-229-0000	AXLE, WHEEL	平叉轴	1
4	GB/T16674-1996	NUT FLANGE	螺母	1
5	30000-229-0000	BRACKET	后桥保护架	1
6	GB/T16674-1996	NUT FLANGE	螺栓	4

www.skuteryostrow.pl

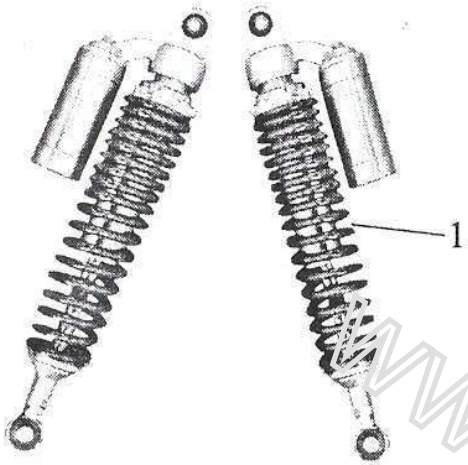

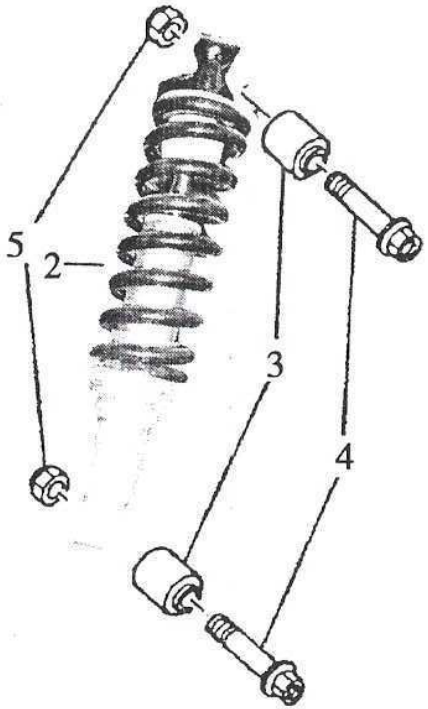

FIG. 19 AR SUSPENSION

REF. NO.	PART NO.	DESCRIPTION	名称	Q'TY
1	62155-229-0000	SHOCK ABSORBER ASSY, FRONT	前减震组件	1
2	62000-229-0000	SHOCK ABSORBER ASSY, REAR	后减震组件	2
3	62113-229-0000	BUSH, REAR SHOCK ABSORBER	减震套	2
4	GB/T 16674-1996	BOLT, FLANGE	螺栓	2
5	62154-229-0000	NUT, SELF-LOCKING	螺母	2

www.skuteryostrow.pl

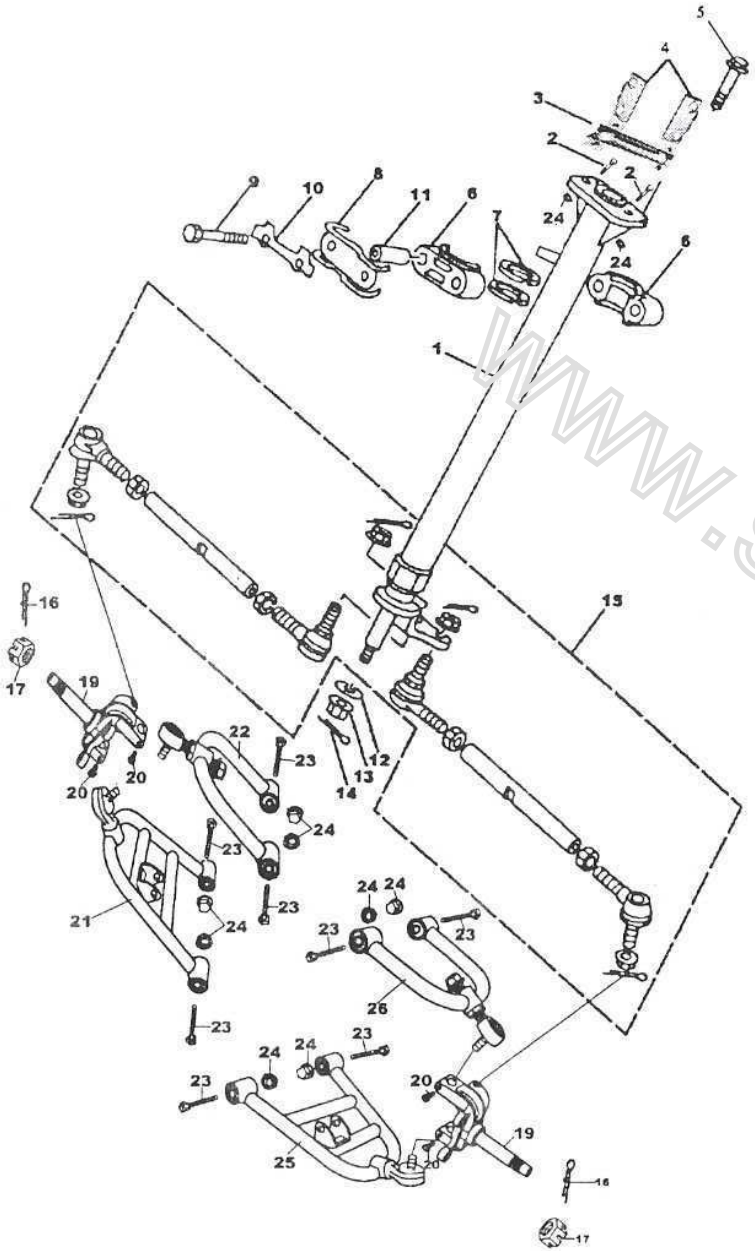

FIG. 20 STEERING

REF. NO.	PART NO.	DESCRIPTION	名称	Q'TY
1	51100-274-0000	COLUMN, STEERING 2	方向柱	1
2	51131-274-0000	BOLT	螺栓 M10×50	2
3	51134-274-0000	HOLDER, HANDLE UNDER	卡座	1
4	51125-274-0000	HOLDER, HANDLE	卡子	2
5	GB/T 16674-1996	BOLT, FLANGE	螺栓	4
6	51135-274-0000	PLANE BEARING, STEERING	方向柱卡子	2
7	51113-274-0000	OIL SEAL	矩形圈	2
8	51121-274-0000	BRACKET, STEERING LOEER	线卡	1
9	51128-274-0000	BOLT	螺栓	2
10	51129-274-0000	WASHER, LOCK 1	方向柱锁紧片	1
11	51136-274-0000	COLLAR	方向柱固定座衬套	2
12	51116-274-0000	WASHER, PLATE	调节垫圈	1
13	51115-274-0000	NUT, SELF-LOCKING	螺母	1
14	GB/T 91-2000	PIN, COTTER	开口销	1
15	51109-274-0000	TIE ROD ASSY	转向拉杆总成	2
16	GB/T91-2000	PIN, COTTER	开口销	2
17	51400-274-0000	STEERING STEM ASSY	前轮转向部件	2
19	51410-274-0000	REDIRECTOR	转向节（左、右）	2
20	GB/T 16674-1996	BOLT	螺栓	4
21	51620-274-0000	ROCK FRAME, RB	右下摇架	1
22	51610-274-0000	ROCK FRAME, RT	右上摇架	1
23	GB/T 16674-1996	BOLT M10X50	螺栓 M10X50	8
24	GB/T6187.1-2000	NUT 10	螺母 M10	10
25	51710-274-0000	ROCK FRAME, LB	左下摇架	1
26	51720-274-0000	ROCK FRAME, LT	左上摇架	1

www.skutenyostrow.pl

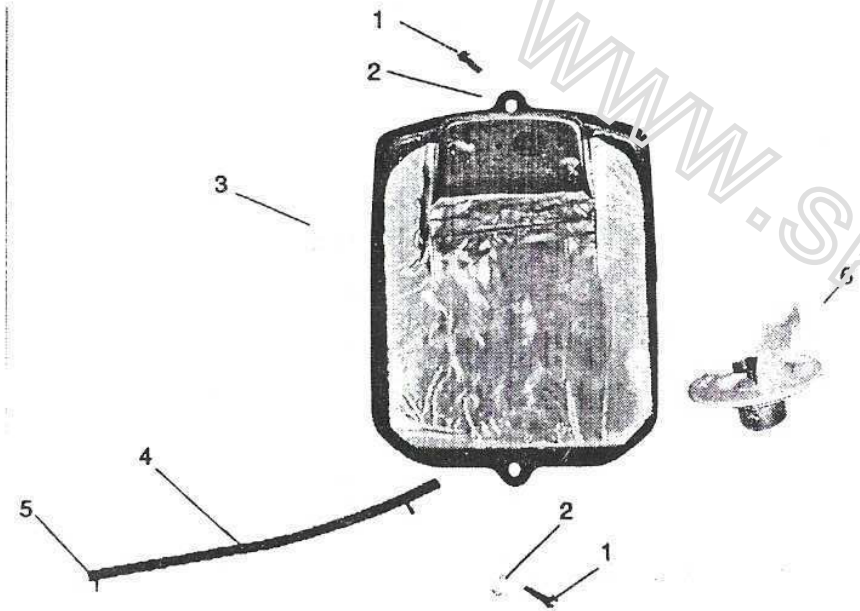

FIG. 21UEL TANK

REF. NO.	PART NO.	DESCRIPTION	名称	Q'TY
1	BJ5787LS M6×12-F5	BOLT M6 12	螺栓 M6×12	2
2	BJ96DQM6-F5	WASHER M16	垫圈 M6	2
3	YXZC-F5	FUEL TANK ASSY	油箱总成	1
4	YG-F5	FUEL HOSE	油管	1
5	YGJ-F5	CLIP，FUEL HOSE	油管夹	1
6	YXG-F5	FUEL TANK COVER	油箱盖	1

www.skuteryostrow.pl

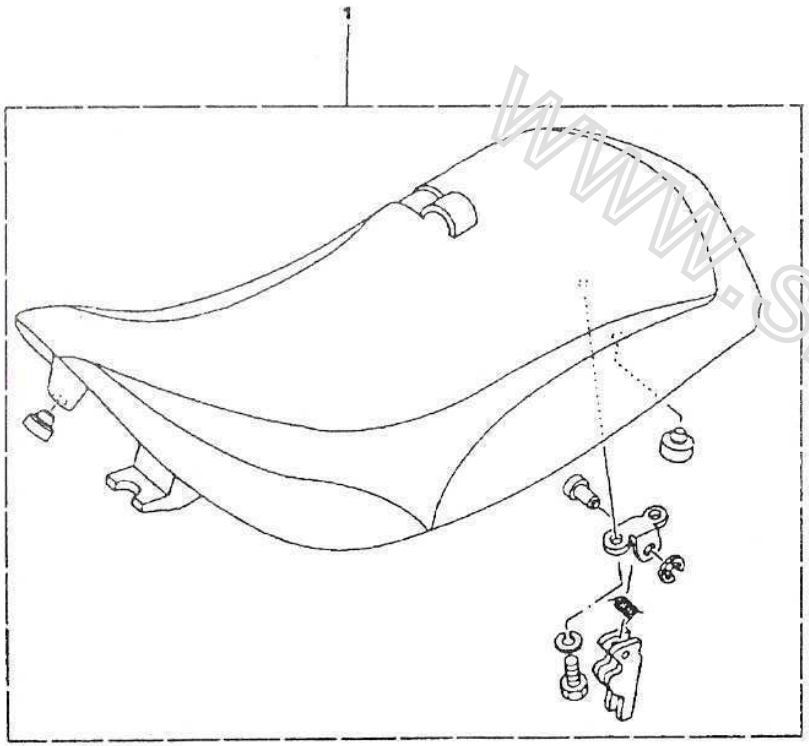

FIG. 22SEAT

REF. NO.	PART NO.	DESCRIPTION	名称	Q'TY
1	44000-229-0000	SINGLE SEAT ASSY	座垫	1

www.skuteryostrow.pl

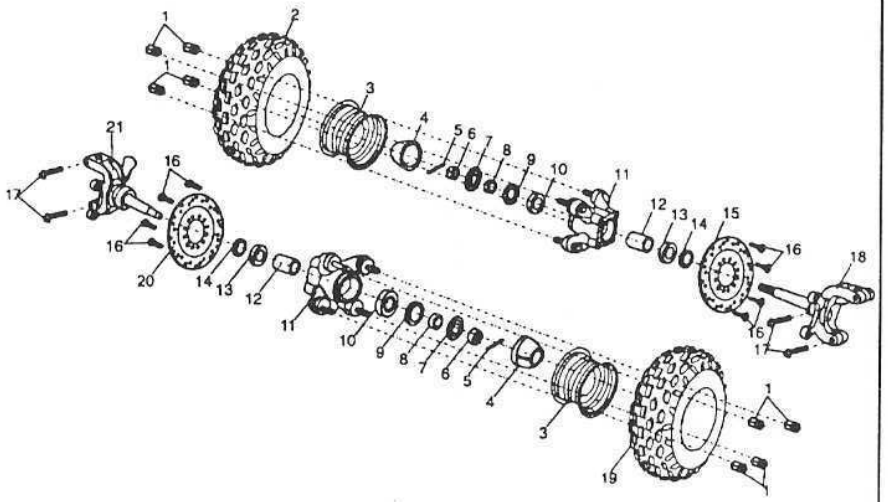

FIG. 23FRONT WHEEL SYSTEM

REF. NO.	PART NO.	DESCRIPTION	名称	Q'TY
1	GB6177	Nut M10×1.25	螺母 M10×1.25	8
2	51111-MA08-000000	Front wheel (R)	右前轮	1
3	51121-MA08-000000	Front rim(R)	右前轮圈	2
4	94000-329-000000	Rubber cover, axle	轮轴护套	2
5	GB91	Pin.cotter 3.2×32	开口销 3.2×32	2
6	GB6178	Nut MI2	螺母 M12	8
7	58311-329-000000	Washer	垫片	2
8	36236-329-000000	Collar	衬套	2
9	36235-329-000000	Oil seal	油封	2
10	36234-329-000000	Collar	轴承	2
11	36230-329-000000	Connecting, front wheel	前轮连接器	2
12	36231-329-000000	Collar	衬套	2
13	36232-329-000000	Bearing	轴承	2
14	36233-329-000000	Oil seal	油封	2
15	53820-329-000063	DISK.FRONT BRAKE（R）	前右制动盘	1
16	GB/T2672	STEP BOLT M8×16	台阶螺拴 M8×16	8
17	93719-329-000000	BOLT M8×42	螺栓 M8×42	4
18	35200-329-00000K	KNUCKLE（R）	右转向节	1
19	51112-MA08-000000	FRONT WHEEL(L)	左前轮	1
20	53810-329-000063	DISK.FRONT BRAKE(L)	前左制动盘	1
21	35100-329-00000K	KNUCKLE(L)	左转向节	1

www.skuteryostrow.pl

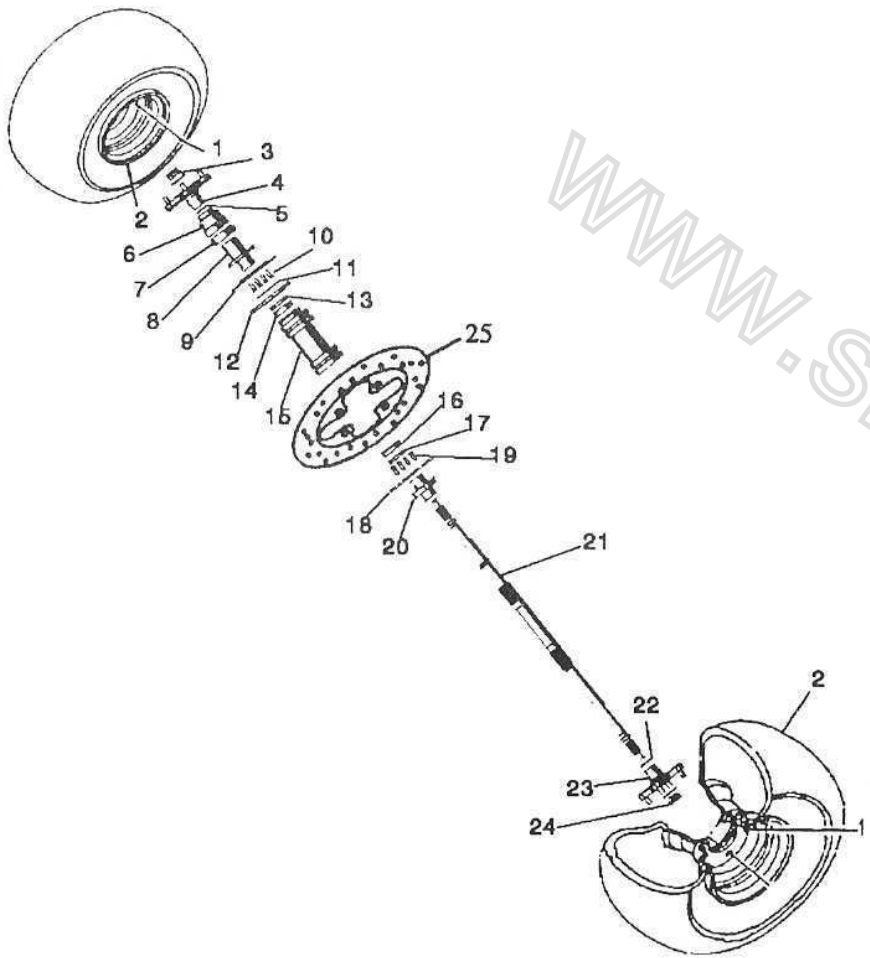

FIG.24REAR WHEEL

REF. NO.	PART NO.	DESCRIPTION	名称	Q'TY
1	64260-229-0000	TIRE(21×7-10)	后轮外胎	2
2	64121-229-0000	HUB, REAR	后轮毂	2
3	64000-229-0000	NUT	螺母	2
4	64214-229-0000	CONNECTOR PLATE	后轮连接盘	1
5	GB/T 16674-1996	CIRCLIP	卡簧	1
6	GB/T 6187.1-2000	ADJUST NUT	调节螺母	1
7	64270-229-0000	NUT	锁紧螺母	2
8	64122-229-0000	FLANGE	大链轮安装花键套	1
9	64124-229-0000	DRIVEN SPROCKET STAY	大链轮基座	1
10	64155-229-0000	BOLT	螺栓	1
11	64126-229-0000	LOCK NUT 17	档圈	1
12	64124-229-000	DRIVEN SPROCKET	大链轮	1
13	65123-229-0000	BEARING	轴承	1
14	65128-229-0000	BEARING	轴承	1
15	65516-229-0000	REAR WHEEL	后桥壳	1
16	GB/T 16674-1996	BEARING	轴承	1
17	64126-229-0000	LOCK NUT 17	档圈	4
18	65230-229-0000	BRAKE DISC STAY	碟刹泵基座	1
19	65125-229-0000	BOLT	螺栓	4
20	65129-229-0000	REAR WHEEL AXLE	后轮轴	1
21	65114-229-0000	CIRCLIP	卡簧	1
22	GB/T 16674-1996	CONNECTOR PLATE	后轮连接盘	1
23	65200-229-0000	NUT	螺母	1
24	GB/T 5783-2000	NUT	螺母	1
25	65201-229-0000	BRAKE DISC	碟刹盘	1

www.skuteryostrow.pl

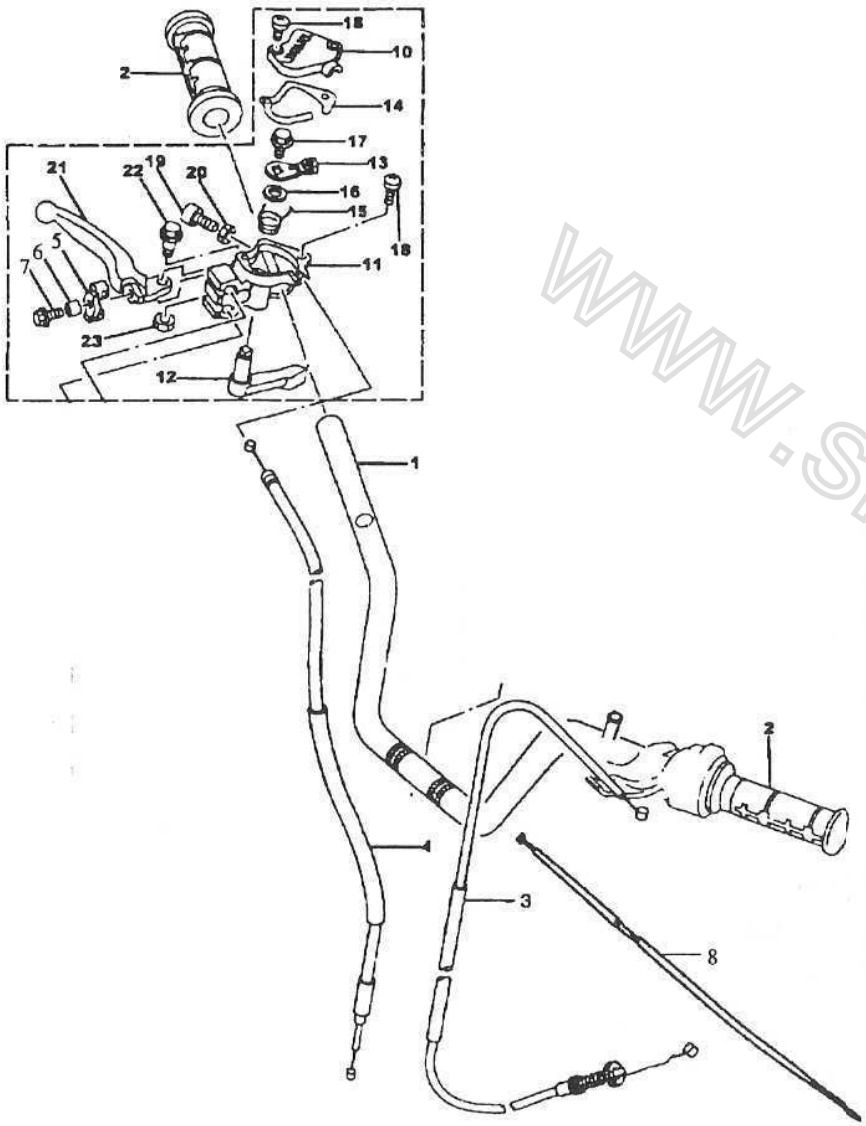

FIG.25 TEERING HANDLE. CABLE

REF. NO.	PART NO.	DESCRIPTION	名称	Q'TY
1	47100-229-0000	HANDLEBAR	手把管	1
2	47311-229-0000	GRIP	手把胶	2
3	47112-229-0000	CABLE, THROTTLE 1	油门线	1
4	46300-229-0000	CABLE, CLUTCH	离合线	1
5	46500-229-0000	JOINT, CABLE	杠杆摇臂	1
6	46523-229-0000	COLLAR	衬套	1
7	46522-229-0000	BOLT, FLANGE	螺栓	1
8	46519-229-0000	CABLE, CHOKE	风门线	1
10	47213-229-0000	CAP, GEAR	加油器盖	1
11	47216-229-0000	BODY, THROTTLE	加油器座	1
12	47200-229-0000	LEVER, THROTTLE	加油手柄	1
13	47215-229-0000	ARM. THROTTLE	摇臂	1
14	14732-229-0000	GASKET	密封垫	1
15	14733-229-0000	SPRING, TORSION	回位弹簧	1
16	GB/T 95-1985	WASHER, PLATE	平垫	2
17	GB/T 16674-1996	BOLT, FLANGE	螺栓	1
18	GB/T 818-2000	SCREW, PAN HEAD	螺钉	1
19	14415-229-0000	BOLT	调节螺钉	1
20	14416-229-0000	NUT	锁紧螺母	1
21	47411-229-0000	LEVER 2	手柄	1
22	47423-229-0000	BOLT	螺栓	1
23	GB/T 6187.1-2000	NUT, U	螺母	1

www.skuteryostrow.pl

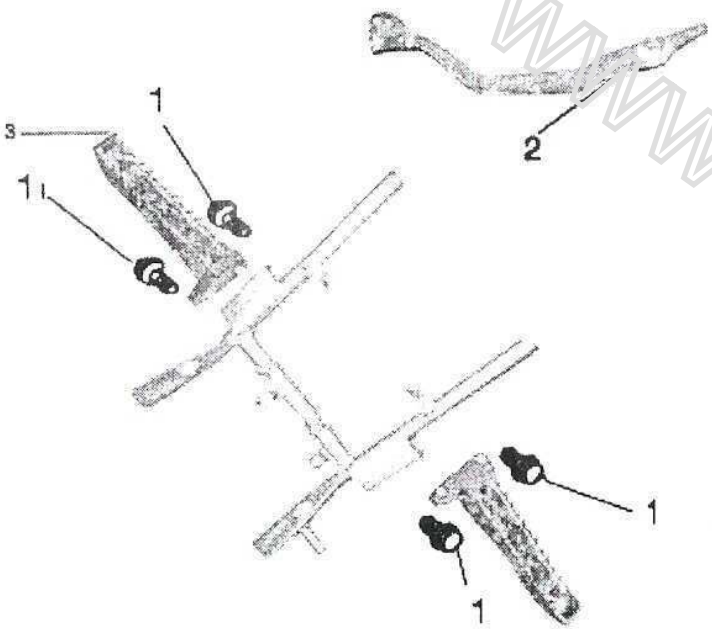

FIG. 26STAND. FOOTREST

REF. NO.	PART NO.	DESCRIPTION	名称	Q'TY
1	65400-229-0000	BOLT	螺栓	4
2	41671-229-0000	BRAKE PADEL	制动踏板	1
3	41641-229-0000	FOOTREST	左、右脚蹬	2

www.skuteryostrow.pl

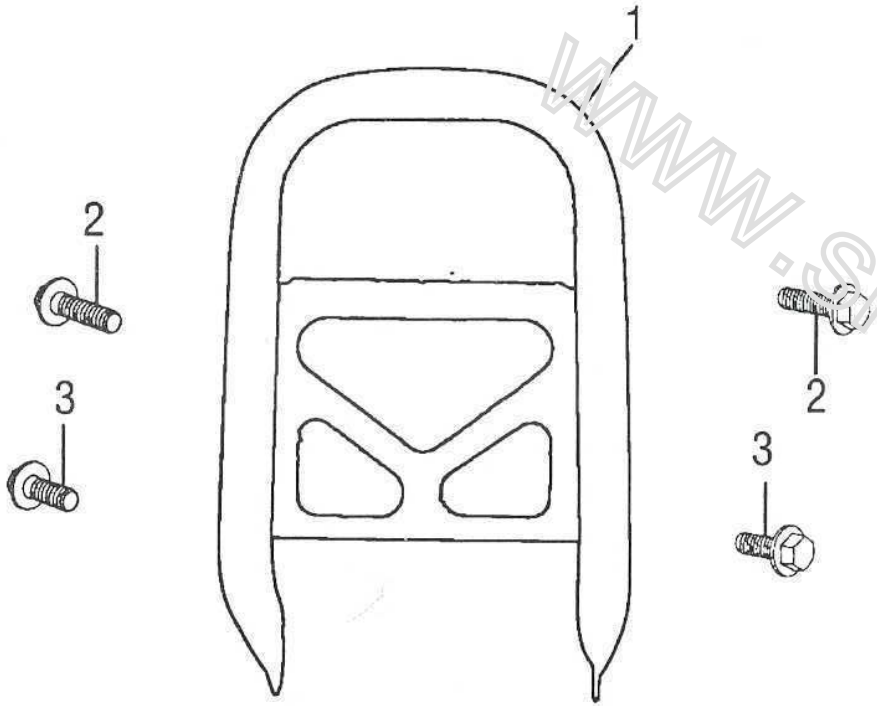

FIG. 27GUARD

REF. NO.	PART NO.	DESCRIPTION	名称	Q'TY
1	43117-229-0000	FRONT GUARD ASSY	前保险杆	1
2	GB/T 16674-1996	BOLT	螺栓	2
3	GB/T 16674-1996	BOLT	螺栓	2

www.skuteryostrow.pl

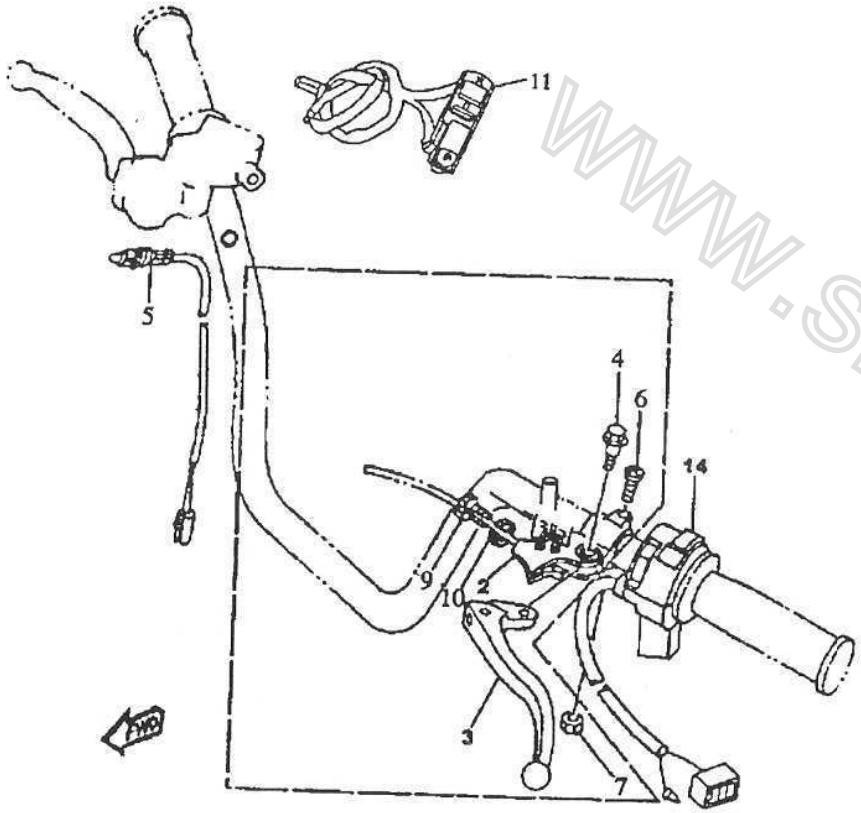

FIG. 28HANDLE SWITCH. LEVER

REF. NO.	PART NO.	DESCRIPTION	名称	Q'TY
1	36500-229-0000	HANDLE SWITCH ASSY	手把开关总成	1
2	47313-229-0000	HOLDER SEAT	闸把座	1
3	47300-229-0000	HOLDER	手柄	1
4	47122-229-0000	LOCK HOLDER	卡子	1
5	GB/T 16674-1996	BOLT	螺栓	1
6	34120-229-0000	SINGLE LIGHT	刹车信号灯电缆	1
7	GB/T 818-2000	SCREW	螺钉	1
8	GB/T 6187.1-2000	NUT	螺母	1
9	46121-229-0000	SPRING	弹簧	1
10	GB/T 16674-1996	BOLT	螺栓	1
11	47144-229-0000	SNAP RING	卡圈	1
12	GB/T 16674-1996	BOLT	螺栓	1
13	47513-229-0000	NUT	锁紧螺母	1
14	36400-229-0000	SWITCH HANDLE	开关闸把	1

www.skuterwostrow.pl

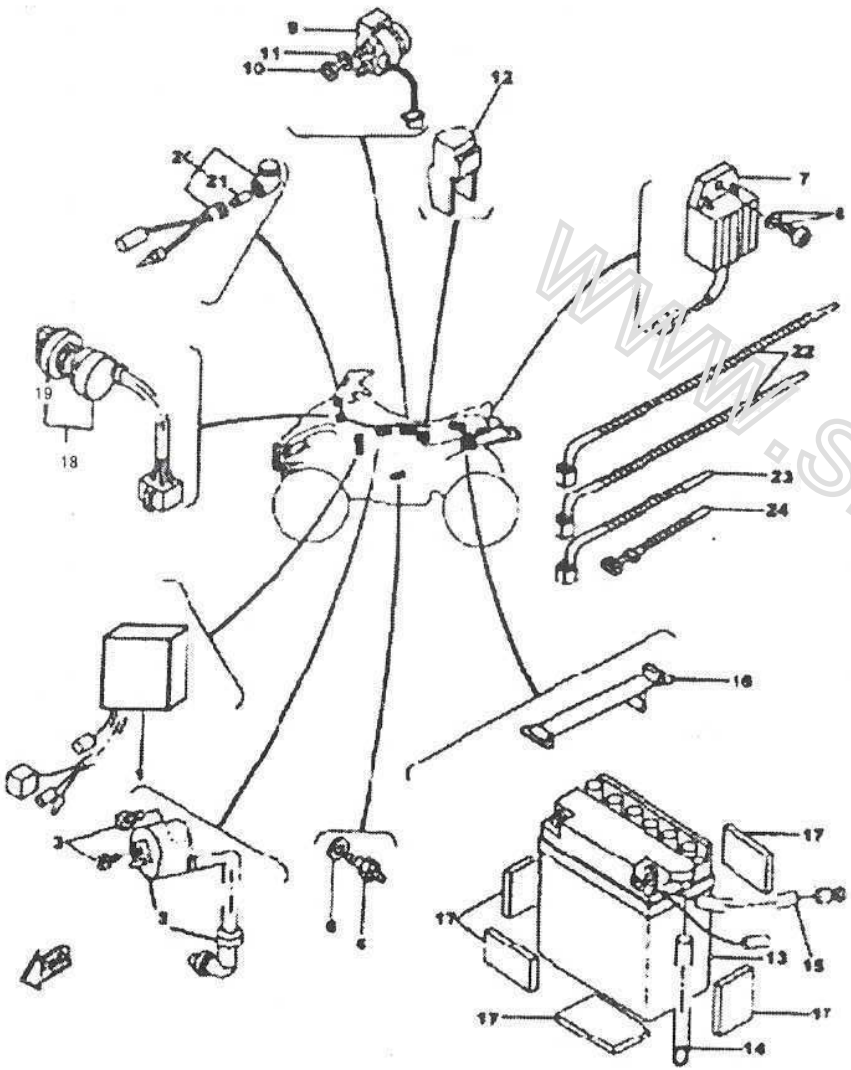

FIG. 29ELECTRICAL

REF. NO.	PART NO.	DESCRIPTION	名称	Q'TY
1	31500-269-0000	C.D.I.UNIT ASSY	直流点火器	1
2	31550-269-0000	IGNITION COIL ASSY	点火线圈	1
3	GB/T 838-1988	SCREW, HEXAGON	螺钉	2
4	31560-269-0000	PLUG CAP ASSY	火花塞帽	1
5	56150-269-0000	STOP SWITCH	制动开关	1
6	56212269-0000	GASKET	垫圈	1
7	31600-269-0000	RECTIFIER&REGULATOR ASSY	全波调压器	1
8	GB/T 838-1988	SCREW, PAN HEAD	螺钉	1
9	31690-269-0000	STARTER RELAY ASSY	启动继电器	1
10	GB/T 6187.1-2000	NUT	螺母	1
11	31762-269-0000	WASHER, SPRING	弹簧	1
12	31680-269-0000	RELAY ASSU	切断继电器	1
13	34200-324-0000	BATTERY ASSY	蓄电池	1
14	34231-324-0000	HOSE (L450)	通气管	1
15	34170-269-0000	WIRE, PLUS LEAD	电线	1
16	34220-269-0000	BAND, BATTERY	电瓶扎带	1
17	34232-269-0000	SEAT BATTERY	减震泡沫	5
18	48100-269-0000	MAIN SWITCH ASSY	点火锁	1
19	46315-269-0000	NUT	锁紧螺母	1
20	36180-269-0000	PILOT LIGHT ASSY	空挡灯线束	1
21	35531-269-0000	BULB（14V－1.7W）	灯泡	1
22	46319-269-0000	HOSE CLAMP	电缆扎带 I	2
23	46321-269-0000	CLAMP	电缆扎带 II	4
24	46322-269-0000	CLAMP	电缆扎带 III	1

www.skuteczostrow.pl

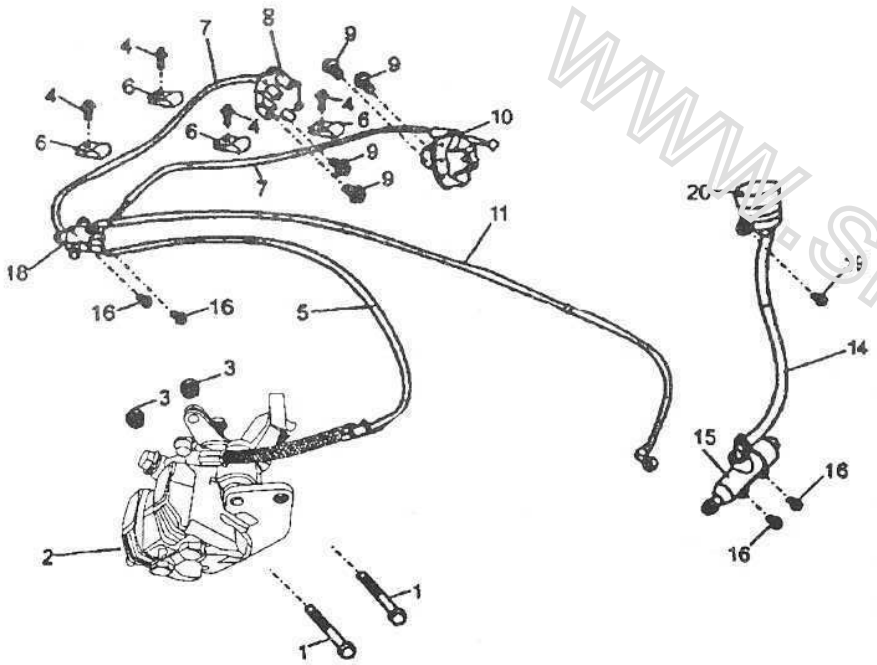

FIG. 30ISK BRAKE SYSTEM

REF. NO.	PART NO.	DESCRIPTION	名称	Q'TY
1	93717-329-000000	BOLT M6×30	螺栓 M6×30	2
2	53530-329-000000	REAR BRANCH PUMP	后分泵	1
3	GB6787	NUT M10	螺母 M10	2
4	GB5787	BOLT M6×12	螺栓 M6×12	4
5	53511-329-000000	TUBE I	油管 I	1
6	55130-329-00000B	TUBE SUPPORT	碟刹油管支架	4
7	53512-329-000000	TUBE II	油管 II	2
8	53510-329-000000	BRANCH PUMP OF FRONT BRAKE(L)	前左制动分泵	1
9	GB5787	BOLT M8×18	螺栓 M8×18	4
10	53520-329-000000	BRANCH PUMP OF FRONT BRAKE(R)	前右制动分泵	1
11	53513-329-000000	TUBE III	油管 III	1
12	53514-329-000000	TUBE IV	油管 IV	1
13	54510-329-000000	BRAKE LEVER	制动手柄	1
14	53515-329-000000	TUBE V	油管 V	1
15	53560-329-000000	MAIN PUMP	制动主泵	1
16	GB5787	BOLT M6×20	螺栓 M6×20	6
17	54511-329-000000	CLIP	卡子	1
18	53540-329-000000	DIVIDING FULE BOX	分油盒	1
19	GB5787	BOLT M6×16	螺栓 M6×16	1
20	53550-329-000000	FUEL CUP	油杯	1

www.skuterpostrow.pl

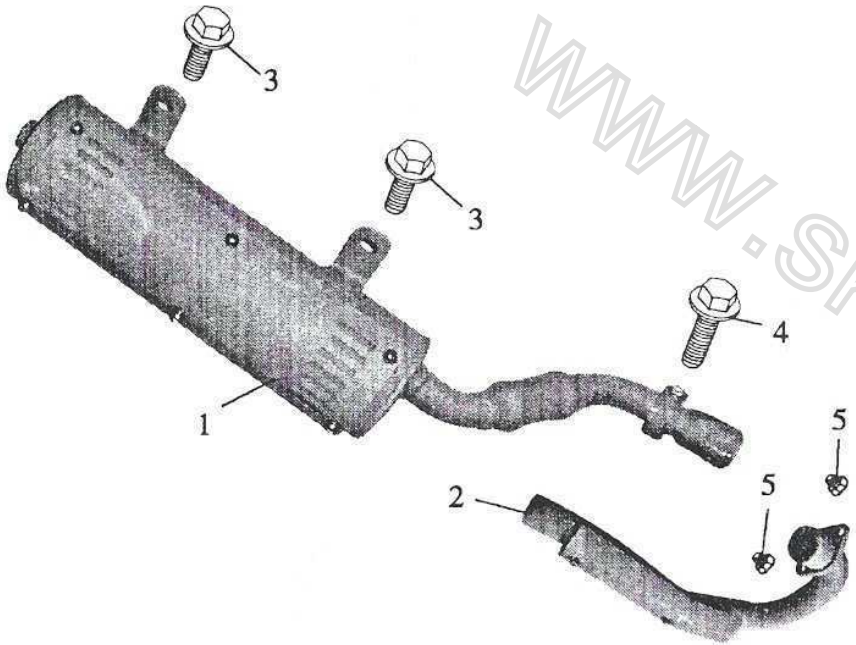

FIG. 31EXHAUST MUFFLER

REF. NO.	PART NO.	DESCRIPTION	名称	Q'TY
1	18000-229-0000	MUFFLER HOUSING	消声器	1
2	18450-229-0000	ORNAMENT COVER	消声器装饰罩	1
3	GB/T 16674-1996	BOLT M8×25	螺栓 M8×25	2
4	GB/T 16674-1996	BOLT M8×30	螺栓 M8×30	1
5	GB/T 818-2000	NUT	螺母	2

www.skuteryostrow.pl

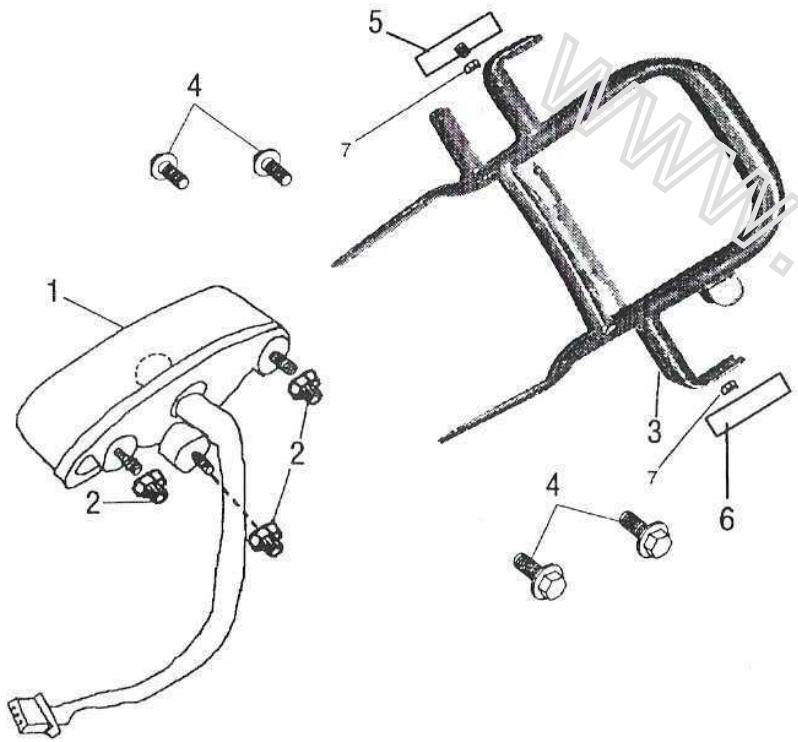

FIG. 32REAR LAMP

REF. NO.	PART NO.	DESCRIPTION	名称	Q'TY
1	35400-074-0000	REAR LAMP ASSY	尾灯组件	1
2	GB/T 6187.1-2000	NUT M6	螺母 M6	3
3	45631-074-0000	REAR RAIDER	后扶手	1
4	GB/T16674-1996	BOLT M8×16	螺栓 M8×16	4
5	34930-074-0000	REFLECTOR, RrR	后右反射器	1
6	34940-074-0000	REFLECTOR, RrL	后左反射器	1
7	GB/T 5787-2000	NUT M6	螺母 M6	2

www.skuteryostrow.pl

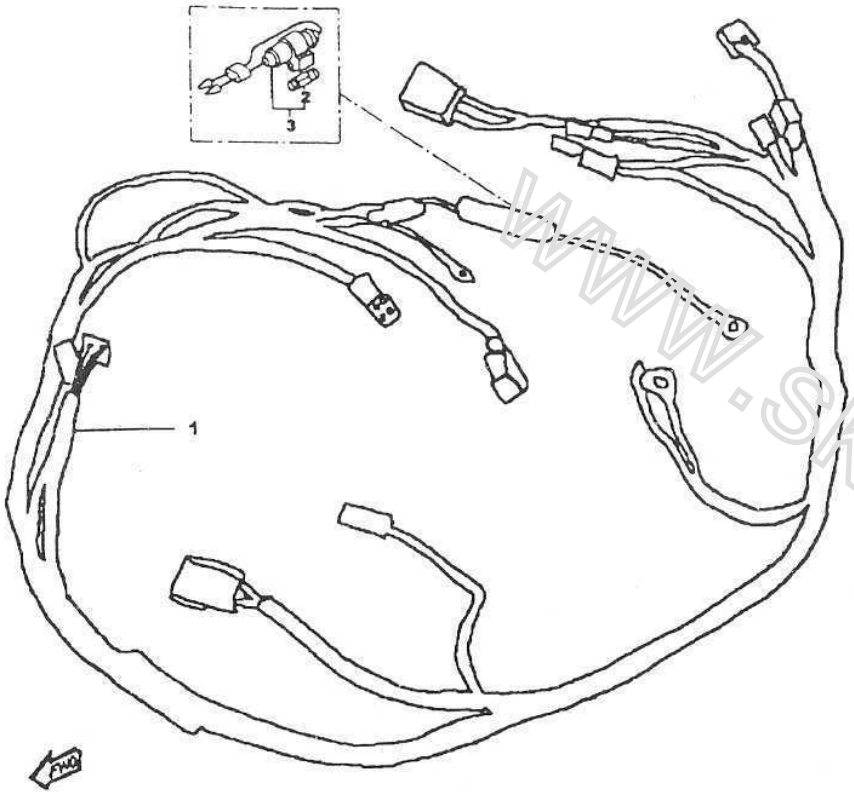

FIG. 33WIRE HARNESS

REF. NO.	PART NO.	DESCRIPTION	名称	Q'TY
1	34100-229-0000	WIRE HARNESS	主电缆线	1
2	34310-229-0000	FUSE HOLDER ASSY	过载保护组件	1
3	34350-229-0000	FUSE(5A)	保险管	1

www.skuteryostrow.pl

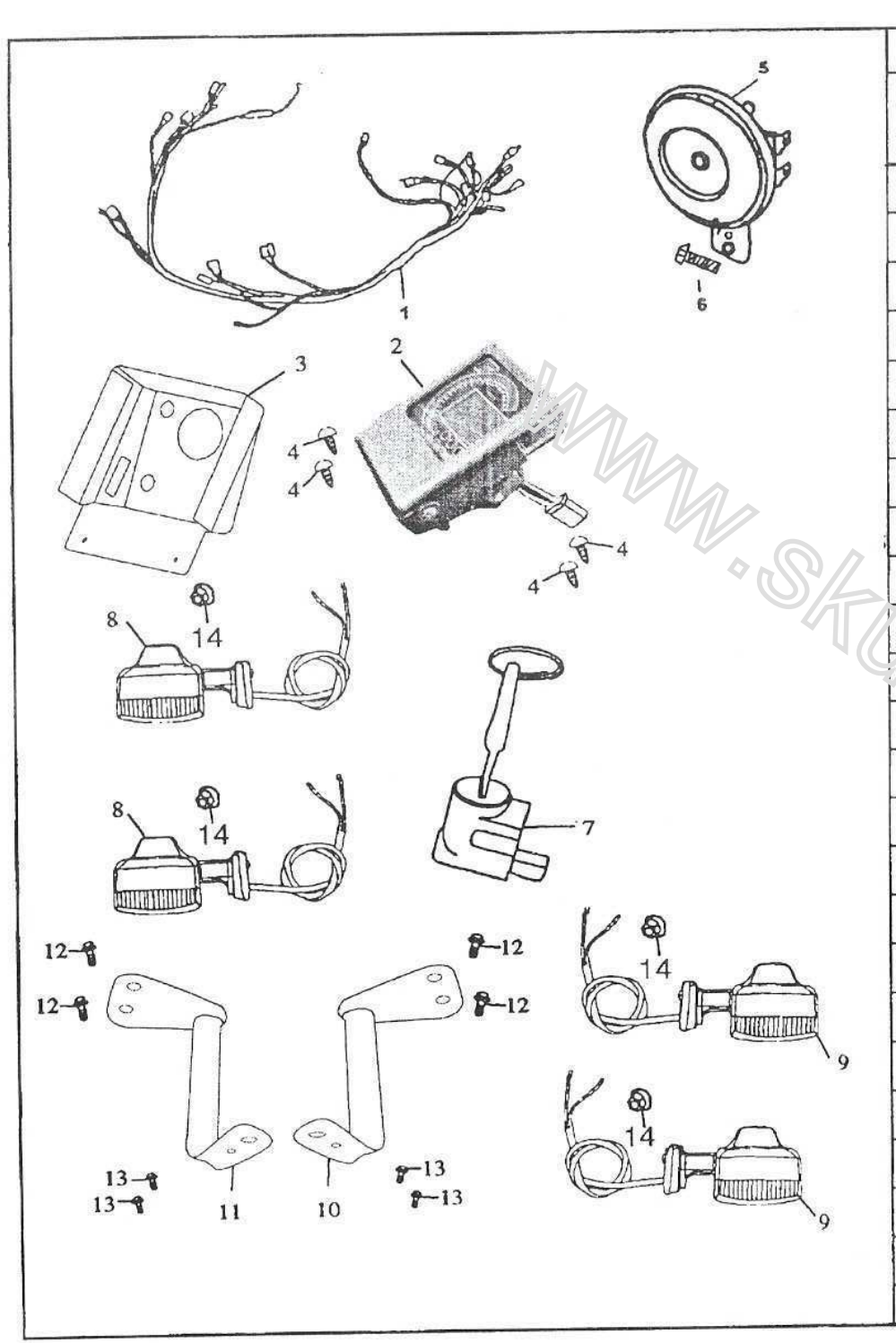

FIG. 34 ACCESSORY

REF. NO.	PART NO.	DESCRIPTION	名 称	Q'TY
1		MAIN CABLE	电缆	1
2		SPEEDOMETER	仪表	1
3		SPEEDOMETER COVER	仪表罩	1
4		BOLT M8 × 60	螺栓M8 × 60	2
5		HORN	喇叭	1
6		BOLT M6 × 12	螺栓M6 × 12	2
7		STEERING LOCK	方向锁	1
8		L. WINKER	左转向灯	2
9		R. WINKER	右转向灯	2
10		FRAME, FR. L.WINKER	前左转向灯支架	1
11		FRAME, FR. R.WINKER	前右转向灯支架	1
12		BOLT M8 × 16	螺栓 M8 × 16	2
13		BOLT M6 × 16	螺栓 M6 × 16	4
14		NUT M8	螺母M8	4

www.skuteryostrow.pl

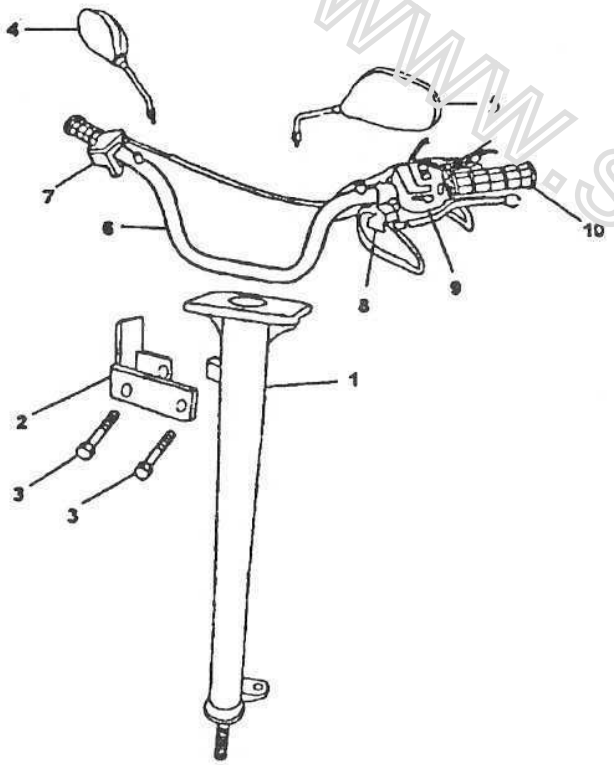

FIG. 35 ACCESSORY

REF. NO.	PART NO.	DESCRIPTION	名　称	Q'TY
1		STEERING STEM	方向柱	1
2		RACK, STEERING LOCK	方向锁支架	1
3		BOLT M8 × 55	螺栓M8 × 55	2
4		R. REARVIEW MIRROR	右后视镜	1
5		L. REARVIEW MIRROR	左后视镜	1
6		HANDLEBAR PIPE	手把管	1
7		GREASER	加油器	1
8		LEFT HANDLE GRIP	左手柄	1
9		L. BRAKE HANDLE SWITCH	左闸把开关	1
10		L. HANDLE BAR	左手把	2

www.skuteryostrow.pl